TAX MAP SECTION 74.20 BLOCK 3 LOT 5

NOTES:
1. THIS IS A SUBDIVISION OF LOT 74.20-3-5 AS SHOWN ON THE TOWN OF ORANGETOWN TAX MAP.
2. AREA OF PARCEL: 1.76 ACRES TOTAL
3. NUMBER OF LOTS: EXISTING -1, PROPOSED - 4 LOTS
4. OWNER:
GRIFF CONSTRUCTION LLC
1 ROUNDHOUSE ROAD
PIERMONT, NY 10968
5. APPLICANT: SAME
6. ZONE: RG
7. IRON PINS TO BE INSTALLED AT ALL LOCATIONS WITH SYMBOL:
8. TAX LOT 74.20-3-5 DENOTES TAX LOT DESIGNATION. SECTION BLOCK & LOT.
9. BENCHMARK-ORANGETOWN SANITARY SEWER MANHOLE AS-BUILT.
10. NO BUILDING PERMIT WILL BE ISSUED UNTIL SEWAGE DISPOSAL ARRANGEMENTS HAVE BEEN APPROVED BY THE ROCKLAND COUNTY HEALTH DEPARTMENT AND/OR THE TOWN OF ORANGETOWN.
11. ANY EXISTING UTILITIES POLES, FIRE HYDRANTS, ETC) AFFECTED BY THE CONSTRUCTION OF THE SUBDIVISION WILL BE RELOCATED AT THE DEVELOPERS EXPENSE PRIOR TO ISSUANCE OF ANY CERTIFICATE OF OCCUPANCY.
12. NO BUILDING PERMIT WILL BE ISSUED FOR ANY LOT UNTIL RESULTS OF TEST PITS HAVE BEEN SUBMITTED TO THE BUILDING DEPARTMENT.
13. WATER SUPPLY: SUEZ WATER.
14. SOIL EROSION & SEDIMENT CONTROL PLANS & DETAILS SHALL BE SUBMITTED TO THE TOWN OF ORANGETOWN ENGINEERING DEPARTMENT OF ENVIRONMENTAL MANAGEMENT & ENGINEERING FOR REVIEW AND APPROVAL. THE SOIL EROSION AND SEDIMENT CONTROL PLAN SHALL MEET THE NYS GUIDELINES FOR URBAN EROSION & SEDIMENT CONTROL (PRIOR TO ISSUANCE OF BUILDING PERMIT FOR LOT #2)
15. TOWN OF ORANGETOWN HIGHWAY DEPARTMENT PERMIT IS REQUIRED FOR ACCESS TO BLAUVELT ROAD FOR LOT #2.
16. SIDEWALKS AND CURBS SHALL BE INSTALLED IN ACCORDANCE WITH THE HIGHWAY DEPARTMENT SPECIFICATIONS FOR SIDEWALKS AND CURBS.
17. AT LEAST ONE WEEK PRIOR TO COMMENCEMENT OF ANY WORK, INCLUDING THE INSTALLATION OF EROSION CONTROL DEVICES OR THE REMOVAL OF TREES AND VEGETATION, A PRE-CONSTRUCTION MEETING MUST BE HELD WITH THE TOWN OF ORANGETOWN DEPARTMENT OF ENVIRONMENTAL MANAGEMENT & ENGINEERING, SUPERINTENDENT OF HIGHWAYS AND THE OFFICE OF BUILDING, ZONING AND PLANNING ADMINISTRATION AND ENFORCEMENT. IT IS THE RESPONSIBILITY AND OBLIGATION OF THE PROPERTY OWNER TO ARRANGE SUCH A MEETING.
18. STORMWATER MANAGEMENT PHASE II REGULATIONS: ADDITIONAL CERTIFICATION, BY AN APPROPRIATE LICENSED OR CERTIFIED DESIGN PROFESSIONAL SHALL BE REQUIRED FOR ALL MATTERS BEFORE THE PLANNING BOARD INDICATING THAT THE DRAWINGS AND PROJECT ARE IN COMPLIANCE WITH THE STORMWATER MANAGEMENT PHASE II REGULATIONS.
19. THE TREE PROTECTION AND PRESERVATION GUIDELINES ADOPTED PURSUANT TO SECTION 21-24 OF THE LAND DEVELOPMENT REGULATIONS OF THE THE TOWN OF ORANGETOWN WILL BE IMPLEMENTED IN ORDER TO PROTECT AND PRESERVE BOTH INDIVIDUAL SPECIMEN TREES AND BUFFER AREA WITH MANY TREES. STEPS THAT WILL BE TAKEN TO RESERVE AND PROTECT EXISTING TREES TO REMAIN ARE AS FOLLOWS:
A. NO CONSTRUCTION EQUIPMENT SHALL BE PARKED UNDER TREE CANOPY.
B. THERE WILL BE NO EXCAVATION OR STOCKPILING OF EARTH UNDERNEATH THE TREES.
C. TREES DESIGNATED TO BE PRESERVED SHALL BE MARKED CONSPICUOUSLY ON ALL SIDES AT A 5 TO 10 FOOT HEIGHT.
D. THE TREE PROTECTION ZONE FOR TREES DESIGNATED TO BE PRESERVED WILL BE ESTABLISHED BY ONE OF THE FOLLOWING METHODS:
-ONE (1) FOOT RADIUS FROM TRUNK PER INCH DBH
-DRIP LINE OF THE TREE CANOPY
THE METHOD CHOSEN SHOULD BE BASED ON PROVIDING THE MAXIMUM PROTECTION ZONE POSSIBLE. A BARRIER OF SNOW FENCE OR EQUAL IS TO BE PLACED AND MAINTAINED ONE YARD BEYOND THE ESTABLISHED TREE PROTECTION ZONE. IF IT IS AGREED THAT THE TREE PROTECTION ZONE OF A SELECTED TREE MUST BE VIOLATED, ONE OF THE FOLLOWING METHODS MUST BE EMPLOYED TO MITIGATE THE IMPACT:
-LIGHT TO HEAVY IMPACTS - MINIMUM OF EIGHT INCHES OF WOOD CHIPS INSTALLED IN THE AREA TO BE PROTECTED. CHIPS SHALL BE REMOVED UPON COMPLETION OF WORK.
-LIGHT IMPACTS ONLY - INSTALLATION OF 3/4" OF PLYWOOD OR BOARDS, OR EQUAL OVER THE AREA TO BE PROTECTED.
THE BUILDER OR ITS AGENT MAY NOT CHANGE GRADE WITH THE TREE PROTECTION ZONE OF A PRESERVED TREE UNLESS SUCH GRADE CHANGE HAS RECEIVED FINAL APPROVAL FOR THE PLANNING BOARD. IF THE GRADE LEVEL IS TO BE CHANGED MORE THAN 6(SIX) INCHES, TREES DESIGNATED TO BE PRESERVED SHALL BE WELLED AND/OR PRESERVED IN A RAISED BED, WITH THE TREE WELL A RADIUS OF THREE (3) FEET LARGER THAT THE TREE CANOPY.
20. ALL LANDSCAPING SHOWN ON THE SITE PLANS SHALL BE MAINTAINED IN A VIGOROUS GROWING CONDITION THROUGHOUT THE DURATION OF THE USE OF THE SITE. ANY PLANTS NOT SO MAINTAINED SHALL BE REPLACED WITH NEW PLANTS AT THE BEGINNING OF THE NEXT IMMEDIATELY FOLLOWING GROWING SEASON.
21. PRIOR TO THE COMMENCEMENT OF ANY SITE WORK, INCLUDING THE REMOVAL OF TREES, THE APPLICANT SHALL INSTALL SOIL EROSION AND SEDIMENTATION CONTROL AS REQUIRED BY THE PLANNING BOARD, PRIOR TO THE AUTHORIZATION TO PROCEED WITH ANY PHASE OF THE SITE WORK, THE TOWN OF ORANGETOWN DEPARTMENT OF ENVIRONMENTAL MANAGEMENT AND ENGINEERING(DEME) SHALL INSPECT THE INSTALLATION OF ALL REQUIRED SOIL EROSION AND SEDIMENTATION CONTROL MEASURES. THE APPLICANT SHALL CONTACT DEME AT LEAST 48 HOURS IN ADVANCE OF AN INSPECTION.
22. THE CONTRACTORS TRAILER, IF ANY IS PROPOSED, SHALL BE LOCATED AS APPROVED BY THE PLANNING BOARD.
23. IF THE APPLICANT, DURING THE COURSE OF CONSTRUCTION, ENCOUNTERS SUCH CONDITIONS AS FLOOD AREAS, UNDERGROUND WATER, SOFT OR SILTY AREAS, IMPROPER DRAINAGE, OR ANY OTHER UNUSUAL CIRCUMSTANCES OR CONDITIONS THAT WERE NOT FORESEEN IN THE ORIGINAL PLANNING, SUCH CONDITIONS SHALL BE REPORTED IMMEDIATELY TO DEME. THE APPLICANT SHALL SUBMIT THEIR RECOMMENDATIONS AS TO THE SPECIAL TREATMENT TO BE GIVEN SUCH AREAS TO SECURE ADEQUATE PERMANENT AND SATISFACTORY CONSTRUCTION. DEME SHALL INVESTIGATE THE CONDITION(S), AND SHALL EITHER APPROVE THE APPLICANT'S RECOMMENDATIONS TO CORRECT THE CONDITION(S), OR ORDER A MODIFICATION THEREOF. IN THE EVENT OF THE APPLICANT'S DISAGREEMENT WITH THE DECISION OF DEME, OR IN THE EVENT OF A SIGNIFICANT CHANGE RESULTING TO THE SUBDIVISION PLAN OR SITE PLAN OR ANY CHANGE THAT INVOLVES A WETLAND REGULATED AREA, THE MATTER SHALL BE DECIDED BY THE AGENCY WITH JURISDICTION IN THAT AREA(IE WETLANDS-US ARMY CORP. OF ENGINEERS).
24. PERMANENT VEGETATION COVER OF DISTURBED AREAS SHALL BE ESTABLISHED ON THE SITE WITHIN THIRTY(30) DAYS OF THE COMPLETION OF CONSTRUCTION.
25. PRIOR (AT LEAST 14 DAYS TO THE PLACING OF ANY ROAD SUB-BASE, THE APPLICANT SHALL PROVIDE THE TOWN OF ORANGETOWN SUPERINTENDENT OF HIGHWAYS AND DEME WITH A PLAN AND PROFILE OF THE GRADED ROAD TO BE PAVED IN ORDER THAT THESE DEPARTMENTS MAY REVIEW THE DRAWINGS CONFORMANCE TO THE APPROVED CONSTRUCTION PLANS AND THE TOWN STREET SPECIFICATIONS.
26. THE PLANNING BOARD SHALL RETAIN JURISDICTION OVER LIGHTING, LANDSCAPING, SIGNS AND REFUSE CONTROL.
27. DISTRICTS:
FIRE: SPARKILL/PALISADES
SCHOOL: SOUTH ORANGETOWN SCHOOL DISTRICT
WATER: SUEZ WATER
SEWER: TOWN OF ORANGETOWN
AMBULANCE: SOUTH ORANGETOWN
LIGHTING: TOWN OF ORANGETOWN
28. ALL ROOF LEADERS TO BE DISCHARGED TO THE DRYWELLS.
29. AREA OF DISTURBANCE=26,922 SF.
30. NO WATER SUPPLY IMPROVEMENTS ARE NECESSARY.
31. ELEVATION DATUM IS TOWN OF ORANGETOWN SEWER DATUM.
32. LOT DRAINAGE SHOWN SHALL CONSTITUTE EASEMENTS RUNNING WITH THE LAND & SHALL NOT BE DISTURBED.
33. ALL UTILITIES, INCLUDING ELECTRIC & TELEPHONE SERVICE, SHALL BE INSTALLED UNDERGROUND.
34. THIS PLAN DOES NOT CONFLICT WITH THE COUNTY OFFICIAL MAP & HAS BEEN APPROVED IN THE MANNER SPECIFIED BY SECTION 239 L & M OF THE GENERAL MUNICIPAL LAW OF THE STATE OF NEW YORK.
35. ENGINEERS CERTIFICATION OF THE DRYWELL INSTALLATION IS REQUIRED. DEPTH TO GROUNDWATER MUST BE VERIFIED DURING CONSTRUCTION.
36. AN ENGINEER WILL CERTIFY THE AS-BUILT CONSTRUCTION IS IN CONFORMANCE WITH THE APPROVED DESIGN AND DRAINAGE PATTERN.
37. SHOULD THE EXISTING STRUCTURE ON LOT #1 BE DEMOLISHED AND A NEW STRUCTURE BE BUILT, THEN THE APPLICANT OR FUTURE APPLICANT SHALL APPEAR BEFORE THE ORANGETOWN BOARDS FOR SITE PLAN REVIEW AND ANY OTHER AGENCIES OR BOARDS REQUIRED FOR REVIEW AND APPROVAL PRIOR TO GRANTING ANY BUILDING PERMITS FOR UNDERTAKING OF SUCH WORK.
38. THE PLANS ARE IN FULL COMPLIANCE WITH THE STORMWATER MANAGEMENT PHASE II REGULATIONS.
39. THE TOWN OF ORANGETOWN SEWER INSPECTOR SHALL BE NOTIFIED AT LEAST 48 HOURS PRIOR TO ANY AND ALL CONSTRUCTION RELATING TO THE PROPOSED SANITARY MAIN EXTENSION/HOUSE CONNECTION(S).
40. ON OCTOBER 2, 2020 PERCOLATION TESTS WERE PERFORMED IN BETWEEN LOTS 3 & 4 AND ON LOT 1. THE TEST RESULTS FOR EACH LOT WAS 13.75" INCHES/HOUR AND 14 INCHES PER HOUR RESPECTIVELY WHICH EXCEEDS THE ASSUMPTIONS MADE.

BULK REGULATIONS - ZONE RG GROUP: Q

	LOT AREA (SF)	STREET FRONTAGE (FT)	LOT WIDTH (FT)	FRONT YARD (FT)	SIDE YARD (FT)	BOTH SIDE YARDS (FT)	REAR YARD (FT)	ACC. STRUCT. SIDE YARD (FT)	MAX BLDG HT	MAX F.A.R.
REQUIRED	10,000	50	75	25	10	30	25	5	1'4"/FT F/Y	0.30
PROVIDED LOT 1	10,911	75.5	75.5	25.0	10.0	30.0	25.0	NA	11.5"/FT F/Y	0.29
PROVIDED LOT 2	11,126	195.5	97.6	6.7**	36.0	NA	38.2	NA	1'4"/FT F/Y	0.29
PROVIDED LOT 3	10,333	79.6	79.6	25.0	10.0	30.0	25.0	NA	1'2"/FT F/Y	0.30
PROVIDED LOT 4	12,165	79.8	76.9	25.0	10.0	30.0	25.0	NA	1'2"/FT F/Y	0.30

** PRE-EXISTING CONDITION
* VARIANCE REQUIRED

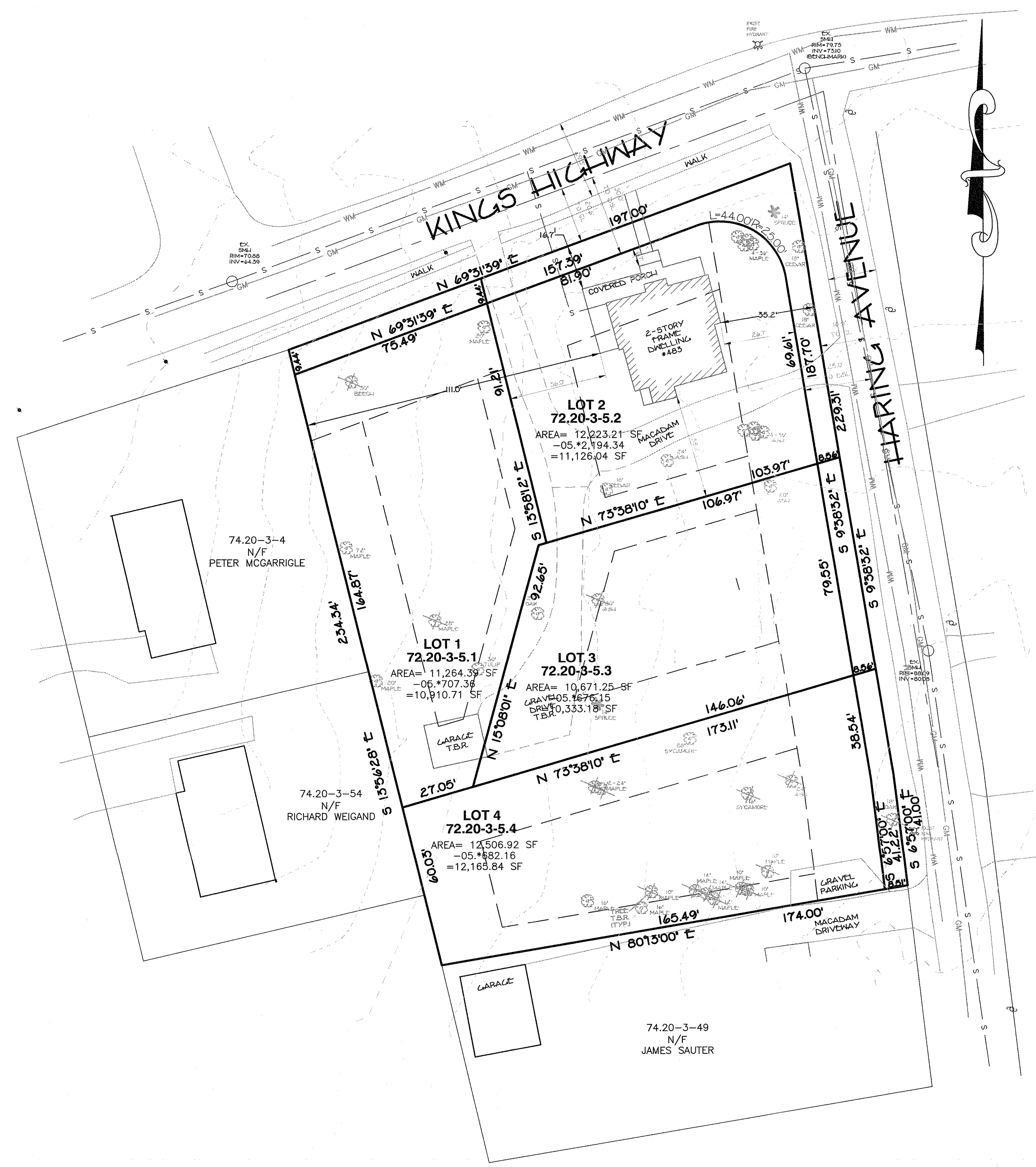

GRAPHIC SCALE
(IN FEET)
1 inch = 30 ft.

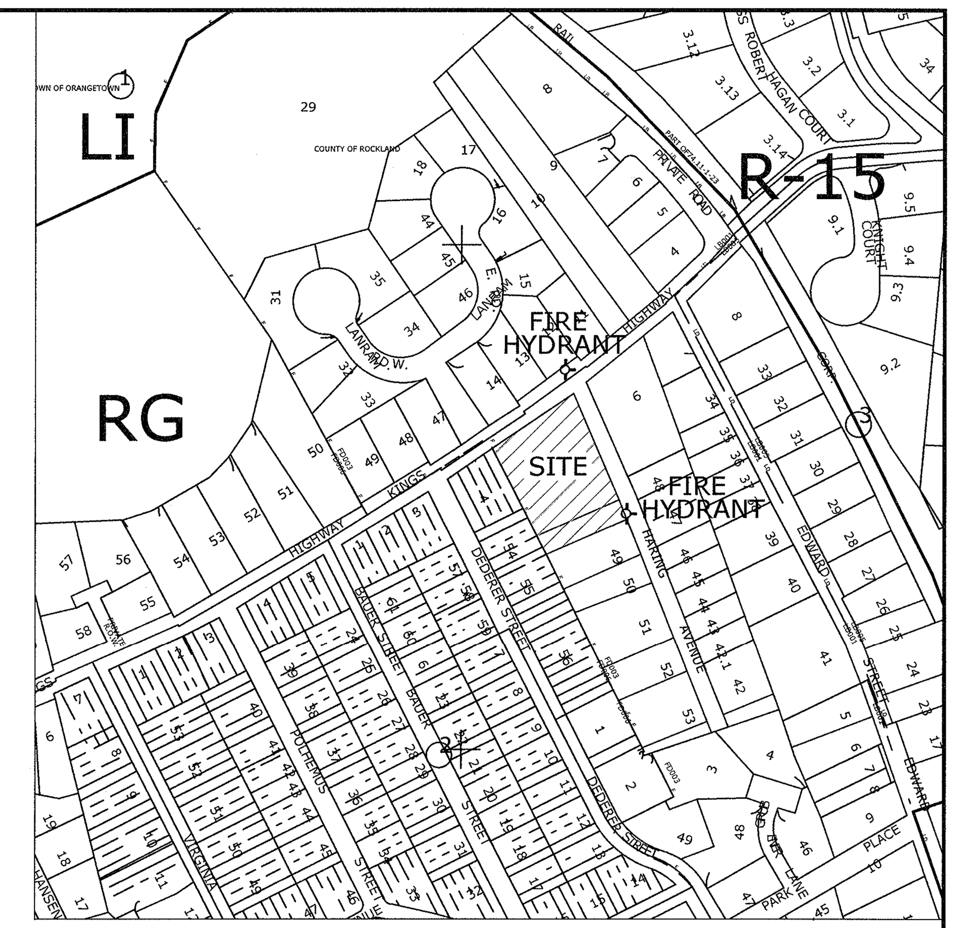

VICINITY MAP
1" = 300'

OWNER: GRIFF CONSTRUCTION LLC. DATE

UNDERGROUND UTILITIES ARE SHOWN IN AN APPROXIMATE WAY FROM AVAILABLE INFORMATION. THE CONTRACTOR SHALL CALL THE LOCAL UNDERGROUND FACILITIES PROTECTIVE ORGANIZATION TO HAVE ALL UNDERGROUND UTILITIES MARKED IN THE FIELD PRIOR TO ANY CLEARING OR ANY CONSTRUCTION. THE CONTRACTOR SHALL ALSO VERIFY THE LOCATION, SIZE AND INVERT OF ALL UTILITIES PRIOR TO ANY CONSTRUCTION. ANY UTILITY FOR WHICH NO EVIDENCE CAN BE SEEN ON THE SURFACE OF THE LANDS MAY NOT BE SHOWN ON THIS DRAWING.

PLANNING BOARD MEETING DEC 9 2020 Town Of Orangetown

DATE	REVISIONS

DESIGNED EM CHECKED PG
DRAWN EM APPROVED PG

APPROVED FOR FILING

CHAIRMAN, PLANNING BOARD DATE

OWNER DATE

ROCKLAND COUNTY DRAINAGE AGENCY / DATE

* I HEREBY CERTIFY THAT THIS SUBDIVISION PLAT WAS PREPARED BY ME AI ACTUAL ON OCTOE

STATE OF NEW YORK ROBERT E.

NEW CITY, NY 10956
845-638-1498

62

UNAUTHORIZED ALTERATION OR ADDITION TO THIS PLAN IS A VIOLATION OF SECTION 7209(2) OF THE NEW YORK STATE EDUCATION LAW. COPIES OF THIS MAP NOT HAVING THE SEAL OF THE SURVEYOR OR ENGINEER SHALL NOT BE VALID.
CERTIFICATIONS ARE NOT TRANSFERABLE TO ADDITIONAL INSTITUTIONS OR SUBSEQUENT OWNERS.
USE OF UNSEALED COPIES OF THIS DOCUMENT IN ANY COURT, FILING, TRANSACTION, OR FILING WITH ANY OFFICE IS AN UNAUTHORIZED VIOLATION OF FEDERAL LAWS.

STATE OF NEW YORK PAUL GDANSKI LICENSED No. 075890 PROFESSIONAL ENGINEER

PAUL GDANSKI ©

MAJOR SUBDIVISION
FOR
SANSONE SUBDIVISION
HAMLET OF TAPPAN
TOWN OF ORANGETOWN
ROCKLAND COUNTY, NEW YORK

PAUL GDANSKI P.E., PLLC
633 WOODMONT LANE
SLOATSBURG, N.Y. 10974
TEL: (917) 418-0999

FILE # 483KING
DATE SEPT. 15, 2020
SCALE 1" = 30'
DWG # 1 OF 3

GRAPHIC SCALE
(IN FEET)
1 inch = 30' ft.

R09718-F(SHEET 1 OF 3)

NOTES:
1. TOTAL LAND DISTURBANCE=33,544 SF(0.77 ACRES)

Drywell Design:			
Soils: Wethersfield "C"			
Development size =	0.1330	Acre	
Undeveloped SCS Curve No.=	74.0000		
Developed SCS Curve No.=	98.0000		
1. Select Design Storm			
100 year, 24-hour	9.3000		
2. Type of subsurface disposal system:			
Precast drywell with 3'-3/4"			
crushed stone			
3. Determine Percolation Rate:			
Percolation Rate:			
Drop	1.0000	inches	
Time	30.0000	minutes	
a. Area of Percolation (Ap):			
Surface area of Cylinder			
Ac=Pi*Dhavg			
D=	1.0000	foot	
havg=	8.5000	inches	
Ac=	2.2253	Ft^2	
Bottom Area			
Ab=Pi*r^2			
Ab=	0.7854	Ft^2	
Volume of Percolation:			
Ap=Ac+Ab			
Ap=	3.0107	Ft^2	
Vp=Ab*h	0.0654	Ft^3	
Soil Percolation Rate			
Sr=volume/area/time	0.0007	Ft^3/Ft^2/Min.	
Sr=	1.0435	Ft^3/Ft^2/day	
Sr=(minus clogging factor of 25%)	0.7826	Ft^3/Ft^2/day	
4. Calculate Required Storage Volume:			
100yr, 24 hour rainfall=	7.5000	inches	
From Table 2-1 of TR-55			
Existing CN=	74.0000	therefore depth Vr=	6.11 Inches
Proposed CN=	98.0000	therefore depth Vr=	9.10 Inches
DeltaVr=	2.9900	inches	
Vs=deltaV*Area			
Vs=	1443.1733	Ft^3	
5. Calculate Volume per Drywell:			
Vw=Pi*r^2*height			
Thickness of Stone=	3.0000	feet	
Thickness of drywell wall=	0.3330	foot	
Diameter of drywell=	6.0000	feet	
Height of drywell=	4.0000	feet	
Vw=	225.1000	Ft^3	
6. Calculate 24-hour percolation volume per drywell(Vp):			
Vp=side surface area of drywell*soil percolation rate(Sr)			
Vp=Pi*D*h*Sr			
Vp=	98.6083	Ft^3/day/drywell	
*Note: Bottom of drywell not included			
7. Calculate the total 24-hour Volume per drywell (Vt):			
Vt=Volume of drywell(Vw)percolation volume(Vp)			
Vt=	323.7083	Ft^3	
8. Determine number of drywells required (DWr):			
DWr=Req. Volume of Storage(Vs)/Total Vol. per Drywell(Vt)	4.5		
DWr=			
	USE	5	

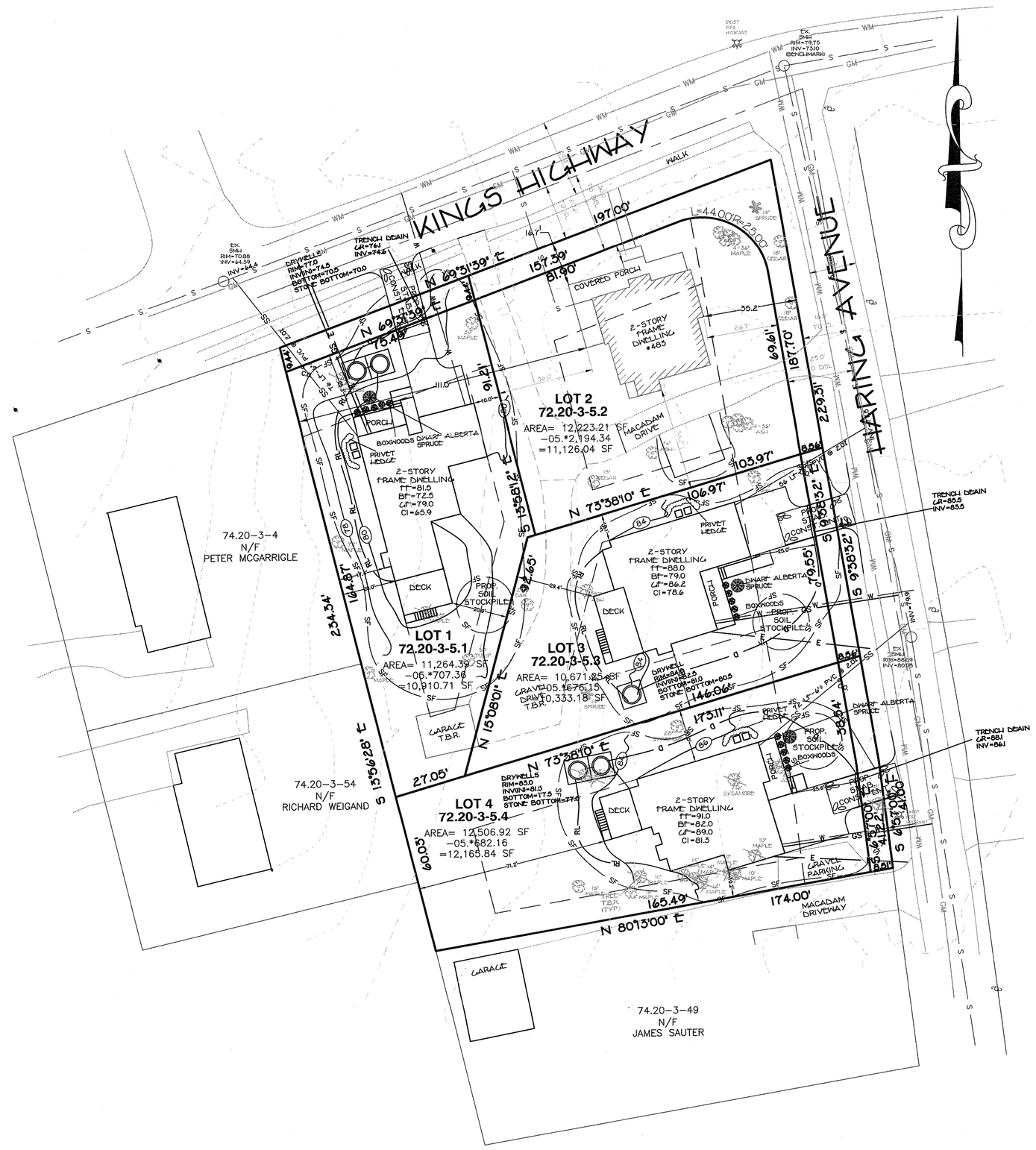

COVERAGE BREAKDOWN			
	EXISTING T.B.R.	PROPOSED	NET
PROVIDED LOT 1	458	2,704	2,246
PROVIDED LOT 2	1,264	354	-910
PROVIDED LOT 3	1.343	2,889	1,546
PROVIDED LOT 4	0	2,942	2,942

GRAPHIC SCALE

30 0 15 30 60 120

(IN FEET)
1 inch = 30 ft.

BULK REGULATIONS - ZONE RG GROUP: Q										
	LOT AREA (SF)	STREET FRONTAGE (FT)	LOT WIDTH (FT)	FRONT YARD (FT)	SIDE YARD (FT)	BOTH SIDE YARDS (FT)	REAR YARD (FT)	ACC. STRUCT. SIDE YARD (FT)	MAX BLDG HT	MAX F.A.R.
REQUIRED	10,000	50	75	25	10	30	25	5	1'4"/FT F/Y	0.30
PROVIDED LOT 1	10,911	75.5	75.5	25.0	10.0	30.0	25.0	NA	11.5"/FT F/Y	0.29
PROVIDED LOT 2	11,126	195.5	97.6	6.7**	36.0	NA	38.2	NA	1'4"/FT F/Y	0.29
PROVIDED LOT 3	10,333	79.6	79.6	25.0	10.0	30.0	25.0	NA	1'2"/FT F/Y	0.30
PROVIDED LOT 4	12,165	79.8	76.9	25.0	10.0	30.0	25.0	NA	1'2"/FT F/Y	0.30

** PRE-EXISTING CONDITION
* VARIANCE REQUIRED

DATE	REVISIONS

DESIGNED EM CHECKED PG
DRAWN EM APPROVED PG

UNAUTHORIZED ALTERATION OR ADDITION TO THIS PLAN IS A VIOLATION OF SECTION 7209(2) OF THE NEW YORK STATE EDUCATION LAW. COPIES OF THIS MAP NOT HAVING THE SEAL OF THE SURVEYOR OR ENGINEER SHALL NOT BE VALID.
CERTIFICATIONS ARE NOT TRANSFERABLE TO ADDITIONAL INSTITUTIONS OR SUBSEQUENT OWNERS.
USE OF UNSEALED COPIES OF THIS DOCUMENT IN ANY COURT, FINANCIAL OR LAND TRANSACTION, OR FILING WITH ANY PUBLIC AGENCY OR OFFICE IS AN UNAUTHORIZED USE AND A VIOLATION OF FEDERAL COPYRIGHT LAW.

STATE OF NEW YORK · PAUL GDANSKI · LICENSED PROFESSIONAL ENGINEER · No. 075890

PAUL GDANSKI LICENSED PROFESSIONAL ENGINEER #075890 ©

GRADING, UTILITY AND SOILE EROSION PLAN
MAJOR SUBDIVSION
FOR

SANSONE SUBDIVISION

HAMLET OF TAPPAN
TOWN OF ORANGETOWN
ROCKLAND COUNTY, NEW YORK

PAUL GDANSKI P.E., PLLC
633 WOODMONT LANE
SLOATSBURG, N.Y. 10974
TEL: (917) 418-0999
EMAIL: PGSKI@EARTHLINK.NET

FILE #	483KING
DATE	SEPT. 15, 2020
SCALE	1" = 30'
DWG #	2 OF 3

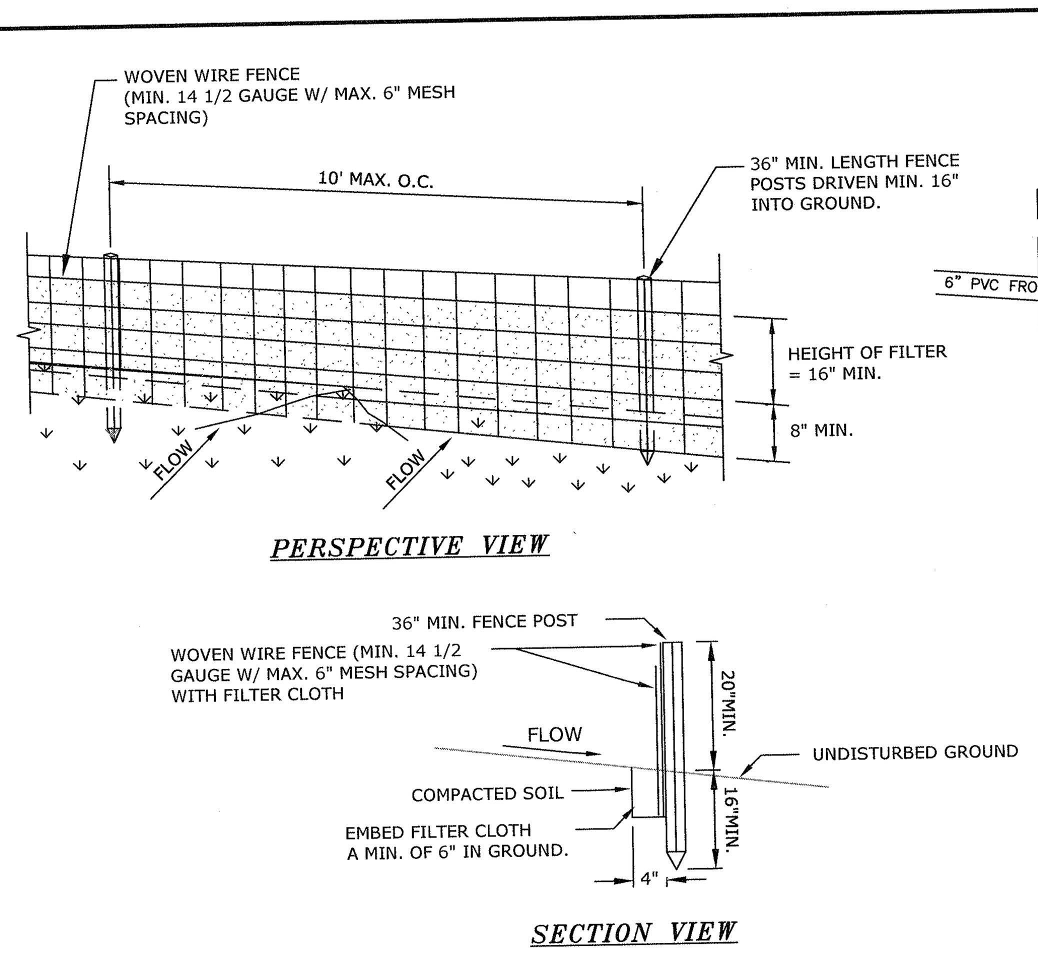

CONSTRUCTION SPECIFICATIONS

1. WOVEN WIRE FENCE TO BE FASTENED SECURELY TO FENCE POSTS WITH WIRE TIES OR STAPLES. POSTS SHALL BE STEEL EITHER "T" OR "U" TYPE OR HARDWOOD.
2. FILTER CLOTH TO BE TO BE FASTENED SECURELY TO WOVEN WIRE FENCE WITH TIES SPACED EVERY 24" AT TOP AND MID SECTION. FENCE SHALL BE WOVEN WIRE, 12 1/2 GAUGE, 6" MAXIMUM MESH OPENING.
3. WHEN TWO SECTIONS OF FILTER CLOTH ADJOIN EACH OTHER THEY SHALL BE OVER- LAPPED BY SIX INCHES AND FOLDED. FILTER CLOTH SHALL BE EITHER FILTER X, MIRAFI 100X, STABILINKA T140N, OR APPROVED EQUIVALENT.
4. PREFABRICATED UNITS SHALL BE GEOFAB, ENVIROFENCE, OR APPROVED EQUIVALENT.
5. MAINTENANCE SHALL BE PERFORMED AS NEEDED AND MATERIAL REMOVED WHEN "BULGES" DEVELOP IN THE SILT FENCE.

SILTATION FENCE

NOT TO SCALE

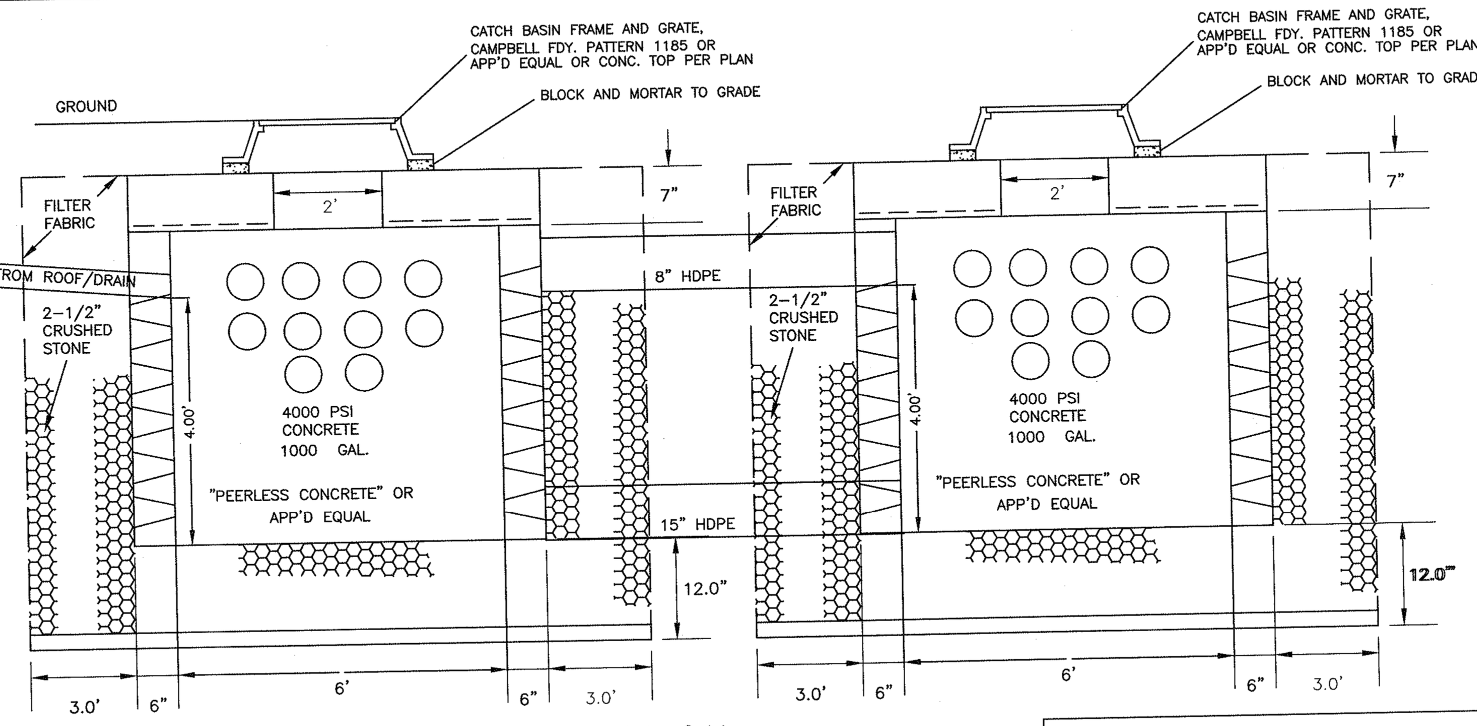

2 SEEPAGE PIT SYSTEM 1: 13' X 26'

N.T.S.

NOTES:

1. SET PIT IN 13'X26' OVERALL EXCAVATION, BACKFILL WITH ALL CLEAN STONE.
2. CONTRACTOR SHALL BE RESPONSIBLE FOR DETERMINING SEASONAL HIGH WATER TABLE. NO SEEPAGE PITS AND/OR STONE SHALL BE SET BELOW SEASONAL HIGH WATER, AND ENGINEER MUST BE CONTACTED IN WRITING SHOULD WATER BE ENCOUNTERED.

SEEPAGE PIT MAINTENANCE NOTES

1. SEEPAGE PITS SHALL BE MAINTAINED BY THE OWNERS OF THE LOTS ON WHICH THEY ARE SITUATED.
2. SAID OWNERS SHALL INSPECT SEEPAGE PITS ON A TWICE YEARLY BASIS AND REMOVE ANY ACCUMULATED SEDIMENT (OR AFTER ANY SIGNIFICANT STORM).
3. IF EVIDENCE PERSISTS THAT THE SEEPAGE PITS ARE NOT FUNCTIONING PROPERLY (I.E. WATER BACKING-UP IN SYSTEM, ETC.), THE OWNERS SHALL INSPECT THE PITS AS SOON AS REASONABLY POSSIBLE AND MAKE NECESSARY REPAIRS TO ENSURE PROPER FUNCTION OF THE SYSTEM.

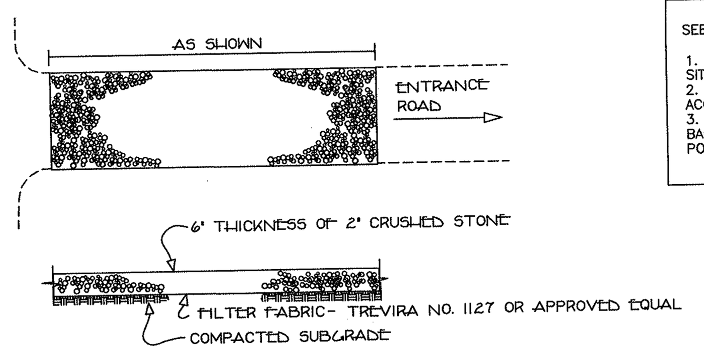

STABILIZED CONSTRUCTION ENTRANCE

N.T.S.

CONSTRUCTION SPECIFICATIONS:

1. STONE SIZE - USE 1-4 INCH STONE, OR RECLAIMED OR RECYCLED CONCRETE EQUIVALENT.
2. LENGTH - NOT LESS THAN 50 FEET.
3. THICKNESS - NOT LESS THAN SIX (6) INCHES.
4. WIDTH - TWELVE (12) FOOT MINIMUM, BUT NOT LESS THAN THE FULL WIDTH AT POINTS WHERE INGRESS OR EGRESS OCCURS. TWENTY-FOUR (24) FOOT IF SINGLE ENTRANCE TO SITE.
5. GEOTEXTILE - WILL BE PLACED OVER THE ENTIRE AREA PRIOR TO PLACING OF STONE.
6. SURFACE WATER - ALL SURFACE WATER FLOWING OR DIVERTED TOWARD CONSTRUCTION ENTRANCES SHALL BE PIPED ACROSS THE ENTRANCE. IF PIPING IS IMPRACTICAL, A MOUNTABLE BERM WITH 5:1 SLOPES WILL BE PERMITTED.
7. MAINTENANCE - THE ENTRANCE SHALL BE MAINTAINED IN A CONDITION WHICH WILL PREVENT TRACKING OR FLOWING OF SEDIMENT ONTO PUBLIC RIGHTS-OF-WAY. ALL SEDIMENT SPILLED, DROPPED, WASHED OR TRACKED ONTO PUBLIC RIGHTS-OF-WAY MUST BE REMOVED IMMEDIATELY.
8. WHEN WASHING IS REQUIRED, IT SHALL BE DONE ON AN AREA STABILIZED WITH STONE AND WHICH DRAINS INTO AN APPROVED SEDIMENT TRAPPING DEVICE.
9. PERIODIC INSPECTION AND NEEDED MAINTENANCE SHALL BE PROVIDED AFTER EACH RAIN.

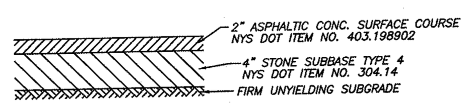

TYPICAL DRIVEWAY PAVEMENT DETAIL

N.T.S.

(PER ORANGETOWN SUBURBAN STREET SPECS)

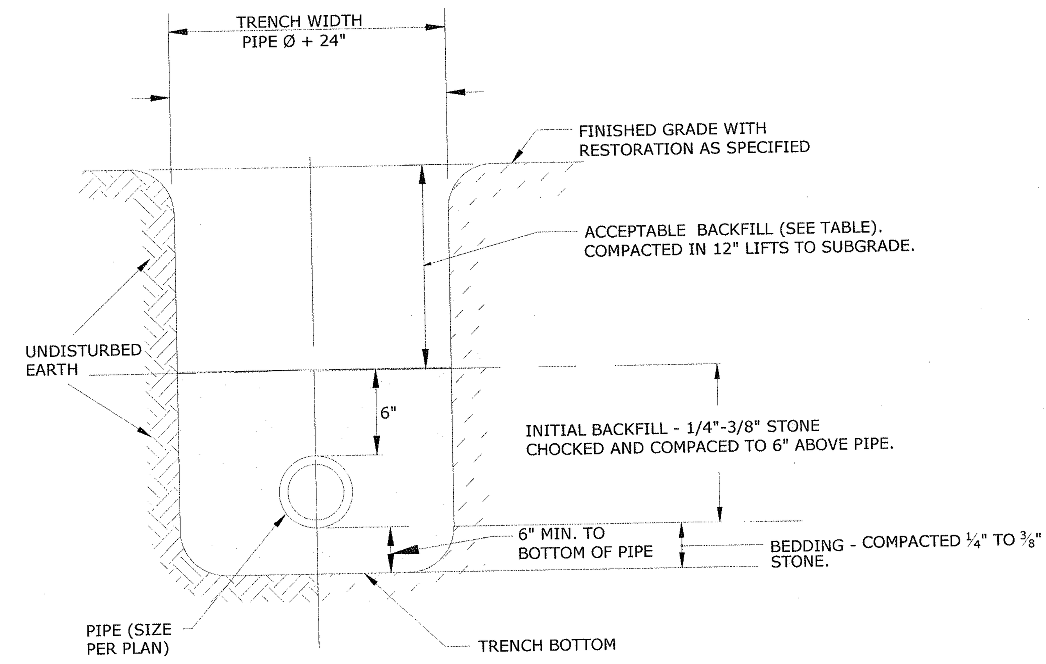

EARTH OR ROCK EXCAVATION

ACCEPTABLE BACKFILL MATERIAL & COMPACTION REQUIREMENTS					
	SOIL CLASSIFICATION				
DESCRIPTION	ASTM D2321	ASTM D2487	AASHTO M43	MINIMUM STANDARD PROCTOR DENSITY %
GRADED OR CRUSHED, CRUSHED STONE, GRAVEL	CLASS I	-	5 56	DUMPED
SAND, GRAVELS AND GRAVEL/SAND MIXTURES; LITTLE OR NO FINES	CLASS II	GW GP SW SP	57 6	85%
SILTY OR CLAYEY GRAVELS, GRAVEL/SAND/SILT OR GRAVEL AND CLAY MIXTURES; SILTY OR CLAYEY SANDS, SAND/CLAY OR SAND/SILT MIXTURES	CLASS III	GM GC SM SC	GRAVEL AND SAND (<10% FINES)	90%

NOTES: INORGANIC SILTS, CLAYS, AND OTHER CLASS IV MATERIAL SHALL NOT PERMITTED.

BACKFILL SHALL CONTAIN NO STONES OVER 6" IN ANY DIMENSION.
IN PAVED AREAS BACKFILL TO BE ITEM 4 (NYSDOT ITEM 304.05) TO SUBGRADE.

STORM SEWER TRENCH CROSS SECTION

NOT TO SCALE

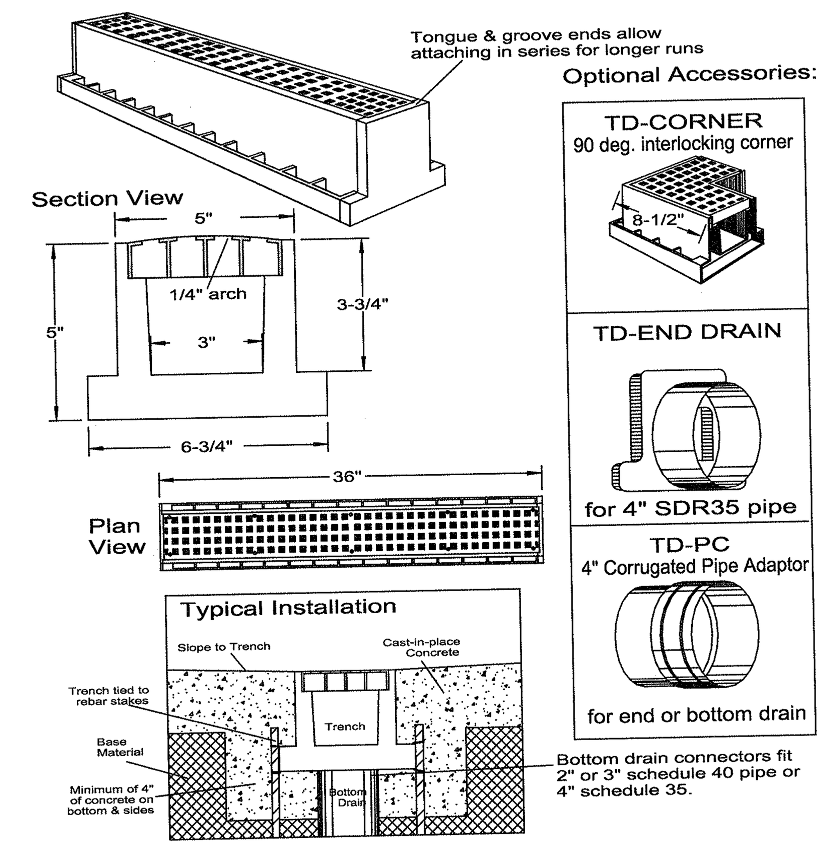

TRENCH DRAIN DETAIL

NOT TO SCALE

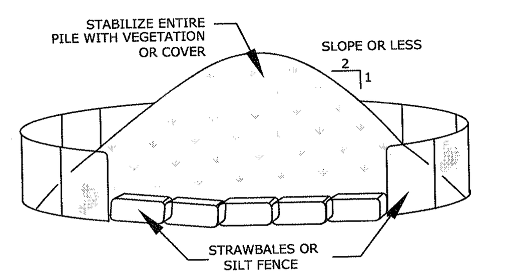

INSTALLATION NOTES:

1. AREA CHOSEN FOR STOCKPILING OPERATIONS SHALL BE DRY & STABLE
2. MAXIMUM SLOPE OF STOCKPILE SHALL BE 1:2
3. UPON COMPLETION OF SOIL STOCKPILING, EACH PILE SHALL BE SURROUNDED BY SILT FENCING OR STRAW BALES, THEN STABILIZED WITH VEGETATION OR COVERED
4. SEE SPECIFICATIONS (EROSION CONTROL) FOR INSTALL OF SILT FENCE

STOCK PILE CONTROL DETAIL

SCALE N.T.S.

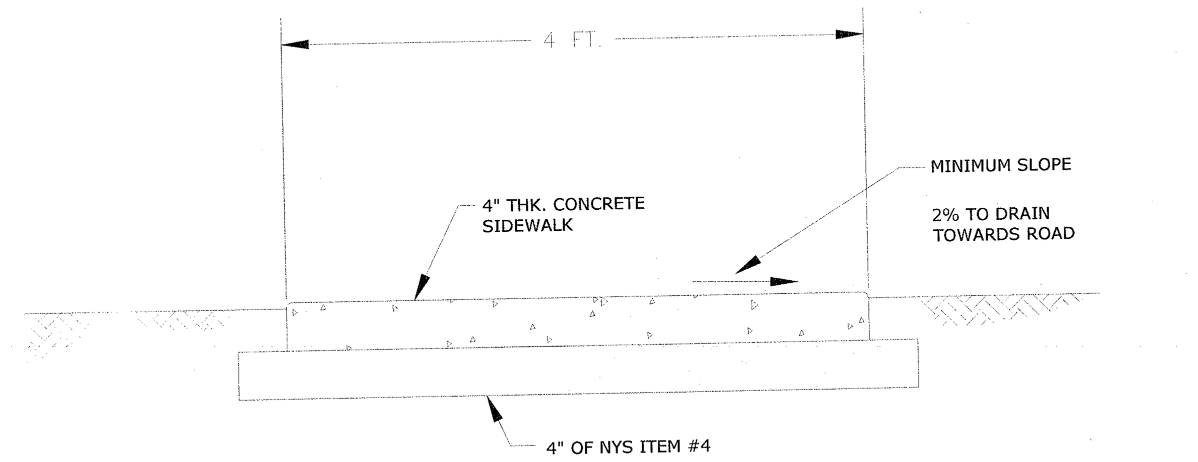

NOTES:

1. EXPANSION JOINTS OF $^{3}/_{16}$" CELLULOSE OR SIMILAR APPROVED MATERIAL SHALL BE PLACED AT 10' INTERVALS.
2. CONTRACTION JOINTS 1" DEEP HAVING $^{1}/_{4}$" RADIUS EDGES SHALL BE PLACED AT 5'-0" INTERVALS IN SIDEWALK.
3. EDGES SHALL HAVE $^{1}/_{2}$" RADIUS.
4. USE 3500 PSI CONCRETE.
5. BROOM FINISH TOP SURFACE.
6. CONCRETE TO BE FIBER REINFORCED.

STANDARD SIDEWALK DETAIL

NOT TO SCALE

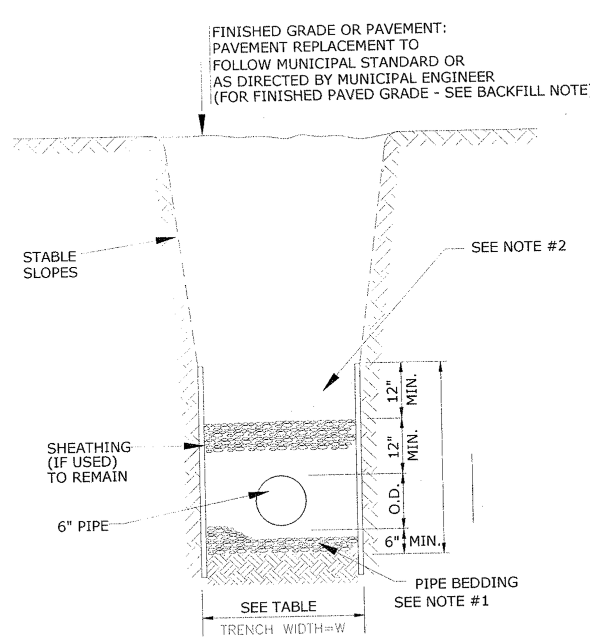

TYPICAL TRENCH DETAIL (SANITARY SEWER)

N.T.S.

NOTES:

1. PIPE BEDDING SHALL BE A CLASS I ASTM D2321 EMBEDMENT MATERIAL THAT SHALL BE EITHER CRUSHED STONE OR WASHED GRAVEL PASSING A 3/4" SIEVE AND RETAINED ON A 3/8" SIEVE. THE EMBEDMENT MATERIAL SHALL BE HAND TAMPED AND COMPACTED TO 90% OF THE MAXIMUM DENSITY OF THE EMBEDMENT MATERIAL AS DETERMINED BY THE STANDARD PROCTOR TEST IN ACCORDANCE WITH AASHTO DESIGNATION T-99. THE CONTRACTOR SHALL BE RESPONSIBLE TO PROVIDE A GO-NO-GO TESTING GAUGE, AS DEFINED IN THE GREEN-TITE (TRADEMARK) PVC GRAVITY SEWER PIPE INSTALLATION GUIDE AS PUBLISHED BY J-M PIPE (OR APPROVED EQUAL) FOR TESTING DEFLECTION OF MAIN LINE SEWER PIPE, AS DIRECTED BY OCSD 1. MAXIMUM MAIN LINE SEWER DEFLECTION SHALL BE NO GREATER THAN 5%.
2. BACKFILL FROM 12 IN. TO 24 IN. ABOVE THE PIPE EMBEDMENT MATERIAL SHALL BE FINE EARTH FREE FROM CINDERS AND SHALL BE MECHANICALLY COMPACTED. REMAINING BACKFILL SHALL BE FREE FROM LARGE CLODS, ROCKS, AND CINDERS.
3. PLACE EMBEDMENT MATERIAL BY HAND AND HAND COMPACT UNDER AND AROUND SIDES OF PIPE. PLACE EMBEDMENT MATERIAL IN 6" LAYERS ABOVE TOP OF PIPE, AND HAND COMPACT TO A POINT 12" MINIMUM ABOVE THE TOP OF PIPE.
4. THE OWNER AND CONTRACTOR SHALL BE RESPONSIBLE TO PROVIDE A COMPETENT PERSON DURING ALL PHASES OF CONSTRUCTION WHOSE DUTY SHALL BE TO INSURE THAT ALL PHASES OF CONSTRUCTION ARE IN FULL COMPLIANCE WITH OCSD NO.1 SPECIFICATIONS AND ALL APPLICABLE FEDERAL, STATE AND LOCAL STATUTES, CODES, RULES, REGULATIONS AND LAWS INCLUDING, BUT NOT LIMITED TO UNITED STATES DEPARTMENT OF LABOR OCCUPATIONAL SAFETY AND HEALTH ADMINISTRATION (OSHA) AND N.Y.S. DEPARTMENT OF LABOR FOR OSHA SECTIONS 1910.146-PERMIT REQUIRED CONFINED SPACE ENTRY, 1926.650-EXCAVATION GENERAL PROTECTION REQUIREMENTS AND 1926.651-TRENCHING AND SHORING, STATE OF NEW YORK UNIFORM FIRE PREVENTION AND BUILDING CODES AND [illegible] FIRE PROTECTION ASSOCIATION CODES.
5. ALL APPROVED MAIN LINE SEWER PIPE SHALL BE THE SAME MATERIAL FROM MANHOLE TO MANHOLE.
6. FILL SECTION AREA MUST BE GRADED WITH THE PLACEMENT OF SUITABLE SOIL MATERIAL AS DETERMINED BY THE PROJECT SITE ENGINEER IN 12 INCH (MAX.) LAYERS COMPACTED TO A MINIMUM OF 95% OF THE MAXIMUM DENSITY OF THE FILL SOIL AS DETERMINED BY THE STANDARD PROCTOR TEST(AASHTO DESIGNATION T-99) TO 2 FEET (MIN.) ABOVE THE TOP OF PIPE AT A MINIMUM WIDTH OF O.D + 4' BEFORE TRENCH EXCAVATING. (ANY FILL SECTION AREA THAT DOES NOT CONFORM TO THIS FILL SECTION AREA COMPACTION STANDARD SHALL REQUIRE THE INTALATION OF OF CLASS 52 DIP, TAR COATED INSIDE AND OUT, FROM MANHOLE TO MANHOLE FOR SEWER MAINS AND ALONG THE ENTIRE SERVICE LINE RUN FOR BUILDING LATERAL SEWERS.) ALL FILL SECTION AREAS SHALL REQUIRE REVIEW AND APPROVAL BY OCSD1 BEFORE INSTALLING PIPE.
7. WHERE ROCK IS ENCOUNTERED IN TRENCH BOTTOM, UNDERCUT MUST BE MADE BETWEEN 12 INCH (MIN.) TO 24 INCH (MAX.)
8. WHERE UNSUITABLE MATERIAL IS ENCOUNTERED IN TRENCH BOTTOM, UNDERCUT TO SUITABLE MATERIAL (AS APPROVED).

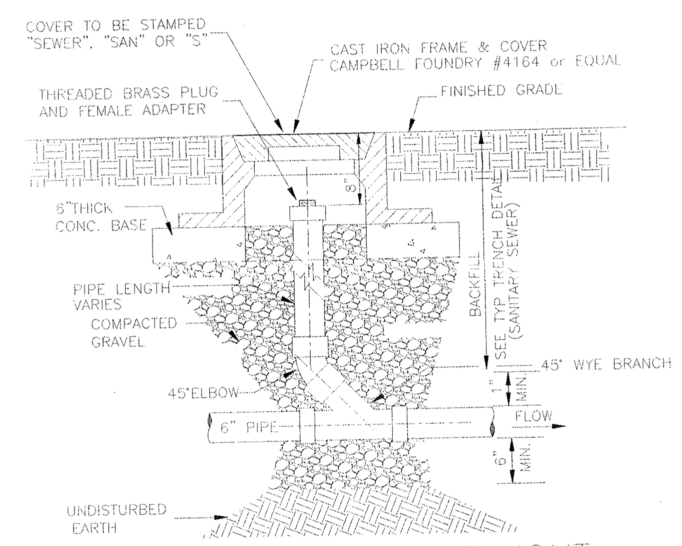

BUILDING SEWER CLEANOUT

N.T.S.

NOTES:

1. EACH BUILDING SEWER SHALL HAVE A CLEANOUT INSTALLED APPROXIMATELY 2' DOWNSTREAM OF THE BUILDING PIPE TO BUILDING SEWER CONNECTION. THEREAFTER, CLEANOUTS SHALL BE INSTALLED ALONG THE BUILDING SEWER EVERY 100 FT.(MAX.). FOR THE PURPOSE OF CLEANOUT LOCATIONS DISTANCE SHALL BE MEASURED FROM THE FIRST CLEANOUT LOCATED DOWNSTREAM OF THE HOUSE PIPE TO BUILDING SEWER CONNECTION, HENCE DOWNSTREAM ALONG THE

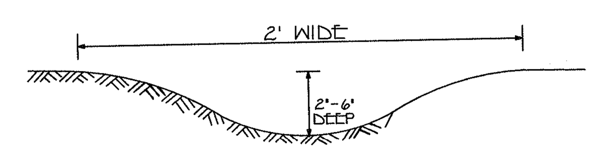

SWALE X-SECTION

N.T.S.

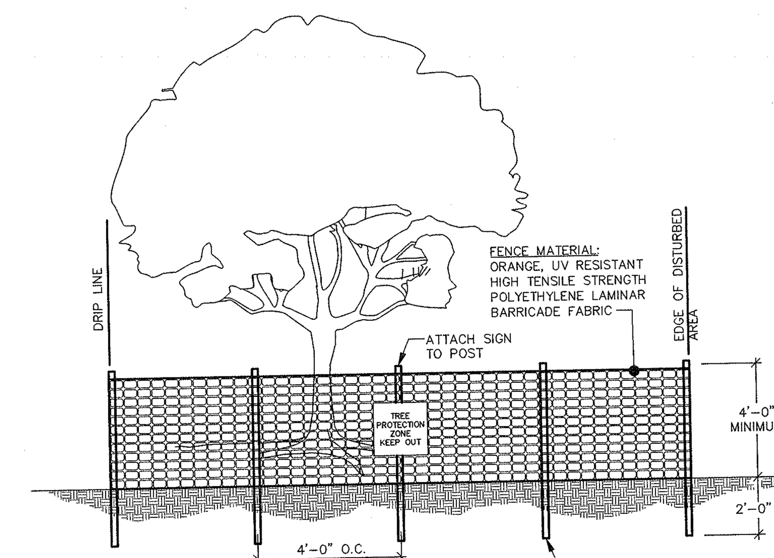

TREE PROTECTION FENCE

N.T.S.

NOTES:

1. ALL PLANTS DESIGNATED TO BE SAVED SHALL BE PROTECTED BY FENCING, AS ILLUSTRATED.
2. INSTALL TREE PROTECTION FENCE AT TREE DRIP LINE OR AT EDGE OF DISTURBED AREA, AS SHOWN ON PLANS, PRIOR TO COMMENCEMENT OF CONSTRUCTION.
3. SPACE TREE PROTECTION ZONE SIGNS A MINIMUM OF ONE EVERY 300 FEET. THE SIZE OF EACH SIGN MUST BE A MINIMUM OF 2' x 2' AND BE VISIBLE FROM BOTH SIDES OF THE FENCE. THE SIGN MUST CONTAIN THE FOLLOWING LANGUAGE IN BOTH ENGLISH & SPANISH: "TREE PROTECTION ZONE, KEEP OUT".
3. THERE SHALL BE NO STORAGE OF MATERIAL WITHIN THE BOUNDARIES OF THE TREE PROTECTION FENCING.
4. TREE PROTECTION FENCING SHALL BE MAINTAINED THROUGHOUT THE DURATION OF THE PROJECT.

PLANTING NOTES:

1. EXCAVATE A HOLE THAT IS 12" WIDER & 6" DEEPER THAN ROOT BALL.
2. REMOVE ANY STRINGS TIED AROUND TRUNK OR STEM BUT LEAVE BURLAP INTACT.
3. TOPSOIL MIX FOR BACKFILL TO BE 2 PARTS TOPSOIL 1 PART SAND AND 1 PART HUMUS.
4. BUILD DEPRESSION AROUND PLANT AND FILL WITH MULCH.
5. STAKE ALL TREES WITH 2 CEDAR STAKES.

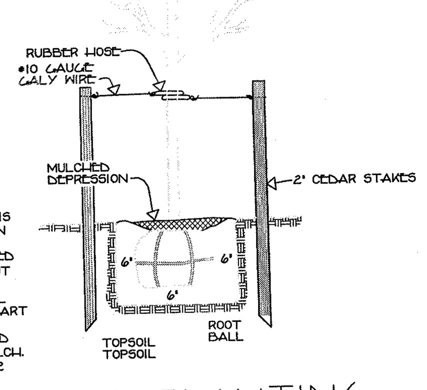

TREE PLANTING

N.T.S.

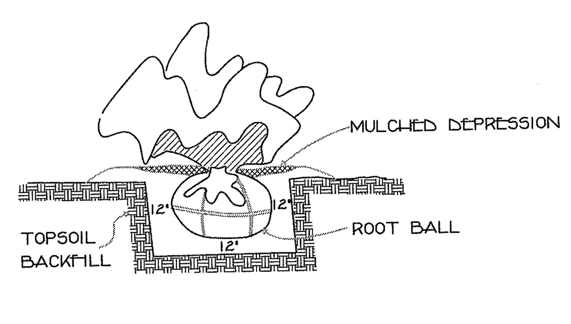

SHRUB PLANTING

N.T.S.

UNAUTHORIZED ALTERATION OR ADDITION TO THIS PLAN IS A VIOLATION OF SECTION 7209(2) OF THE NEW YORK STATE EDUCATION LAW. COPIES OF THIS MAP NOT HAVING THE SEAL OF THE SURVEYOR OR ENGINEER SHALL NOT BE VALID.

CERTIFICATIONS ARE NOT TRANSFERABLE TO ADDITIONAL INSTITUTIONS OR SUBSEQUENT OWNERS.

USE OF UNSEALED COPIES OF THIS DOCUMENT IN ANY COURT, FINANCIAL OR LAND TRANSACTION, OR FILING WITH ANY PUBLIC AGENCY OR OFFICE IS AN UNAUTHORIZED USE AND IS A VIOLATION OF FEDERAL COPYRIGHT LAW.

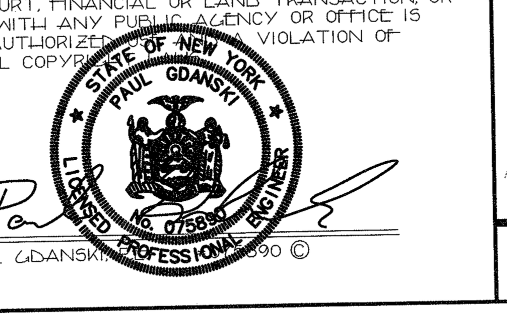

PAUL GDANSKI P.E. No. 075890 ©

DATE	REVISIONS

DESIGNED EM CHECKED PG
DRAWN EM APPROVED PG

DETAIL SHEET
MAJOR SUBDIVISION
FOR
SANSONE SUBDIVISION

HAMLET OF TAPPAN
TOWN OF ORANGETOWN
ROCKLAND COUNTY, NEW YORK

PAUL GDANSKI P.E., PLLC
633 WOODMONT LANE
SLOATSBURG, N.Y. 10974
TEL: (917) 418-0999
EMAIL: PGSKI@EARTHLINK.NET

FILE # 483KING
DATE SEPT. 15, 2020
SCALE 1" = 30'
DWG # 3 OF 3