SITE IMPROVEMENTS

700 & 800 BRADLEY HILL ROAD

SECTION 65.18, BLOCK 1, LOTS 3 & 4

TOWN OF ORANGETOWN, ROCKLAND COUNTY, N.Y.

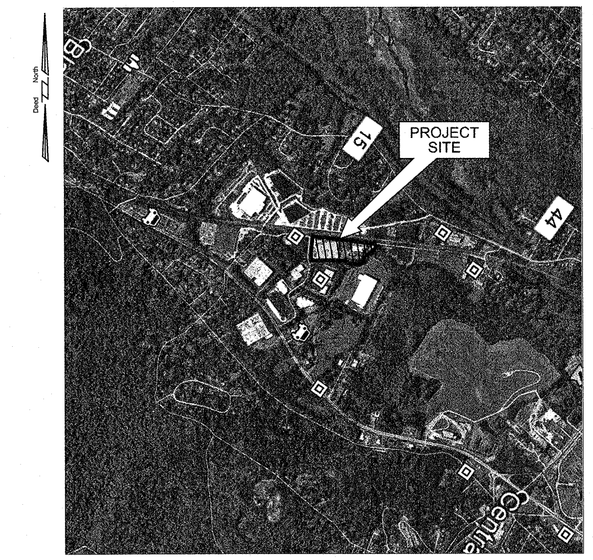

LOCATION MAP

SCALE: 1"=2000'

REFERENCE
MAPPING TAKEN FROM GOOGLE EARTH, DATED JULY 22, 2020.

INDEX OF DRAWINGS

TITLE	SHEET NAME	SHEET NO.
COVER SHEET	C-1	1 OF 11
EXISTING CONDITIONS PLAN	EC-1	2 OF 11
DEMOLITION PLAN	DE-1	3 OF 11
SITE PLAN	S-1	4 OF 11
GRADING & UTILITY PLAN	G-1	5 OF 11
SOIL EROSION AND SEDIMENT CONTROL PLAN	SE-1	6 OF 11
IMPERVIOUS COVERAGE PLAN	IC-1	7 OF 11
SITE EASEMENT PLAN	E-1	8 OF 11
DETAILS & NOTES	D-1	9 OF 11
DETAILS & NOTES	D-2	10 OF 11
LIGHTING PLAN	L-1	11 OF 11

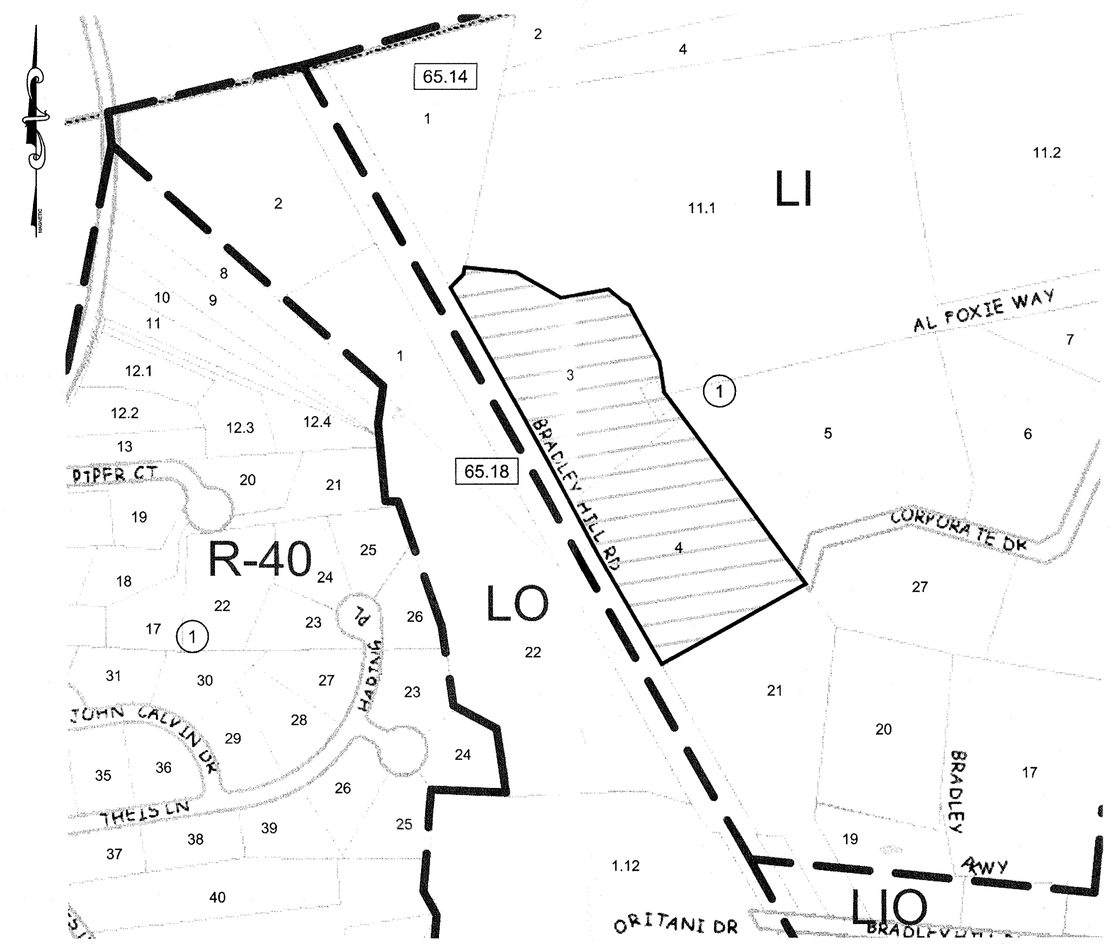

ZONING LOCATION MAP

SCALE: 1"=300' ±

Scale 1"=300'

0 150 300 600 900 1200

LEGEND

(1)	BLOCK NUMBER
65.18	SECTION NUMBER
3	LOT NUMBER
	LOT LINE
	PROJECT AREA LIMITS
R-40	LOW DENSITY RESIDENTIAL DISTRICT
LI	LIGHT INDUSTRIAL DISTRICT
LO	LABORATORY-OFFICE DISTRICT
LIO	LIGHT INDUSTRIAL OFFICE DISTRICT

SITE PLAN OF:
700 & 800 BRADLEY HILL ROAD
TOWN OF ORANGETOWN, NEW YORK

OWNER/APPLICANT:
AG-OE 700 BRADLEY HILL ROAD OWNER, L.L.C.
C/O ONYX MANAGEMENT GROUP, LLC
900 ROUTE 9 NORTH, SUITE 400
WOODBRIDGE, NJ 07095

AG-OE 800 BRADLEY HILL ROAD OWNER, L.L.C.
C/O ONYX MANAGEMENT GROUP, LLC
900 ROUTE 9 NORTH, SUITE 400
WOODBRIDGE, NJ 07095

ATTORNEY:
MCCULLOUGH, GOLDBERGER & STAUDT, LLP
1311 MAMARONECK AVE., SUITE 340
WHITE PLAINS, NY 10605
CONTACT: SETH M. MANDELBAUM
PHONE:914-949-6400
EMAIL: SMandelbaum@mgslawyers.com

CIVIL ENGINEER:
SESI CONSULTING ENGINEERS, DPC
12A MAPLE AVENUE
PINE BROOK, NJ 07058
CONTACT: FRANZ W. LAKI ,PE
PHONE: 973-808-9050
EMAIL: FL@SESI.ORG

PLANNING BOARD
MEETING OF:
FEB 10 2021
Town Of Orangetown

TOWN OF ORANGETOWN

THIS SITE PLAN IS HEREBY APPROVED BY THE PLANNING BOARD OF THE TOWN OF ORANGETOWN, NEW YORK.

DATE _____ SECRETARY _____

DATE _____ CHAIRMAN _____

THIS SITE PLAN HAS BEEN REVIEWED AND IS HEREBY APPROVED.

DATE _____ TOWN ENGINEER _____

STATE OF NEW YORK
FRANZ W. LAKI
096712
LICENSED PROFESSIONAL ENGINEER

FRANZ W. LAKI, P.E.
PROFESSIONAL ENGINEER
N.Y. LIC. NO. 96772

SESI
CONSULTING ENGINEERS

CERT. OF AUTH. # 24GA27934700

SOILS / FOUNDATIONS
SITE DESIGN
ENVIRONMENTAL

12A MAPLE AVE. PINE BROOK, N.J. 07058 PH: 973-808-9050

DATE: 8/31/2020 JOB NO. 10642 SHEET C-1

rev	date	description	by
1	10/30/2020	REV PER TOWNSHIP'S REVIEW LETTERS DATED 10/21/2020 AND 10/27/2020	RDM

NYS Education Law
Unauthorized alterations or additions to this plan are a violation of section 7209 (2) of the New York State Education Law. Copies of this map not having the seal of the engineer shall not be valid.

© SESI CONSULTING ENGINEERS D.P.C. 2020
This drawing and all information contained here on is proprietary information of SESI CONSULTING ENGINEERS D.P.C. and may not be copied or reproduced, either in whole or in part, by any method, without written permission of SESI CONSULTING ENGINEERS D.P.C.

N:\CADD\10642\10642-700 BRADLEY COVER.DWG 09/08/21 10:58:41AM, ezra, LAYOUT:COVER-1

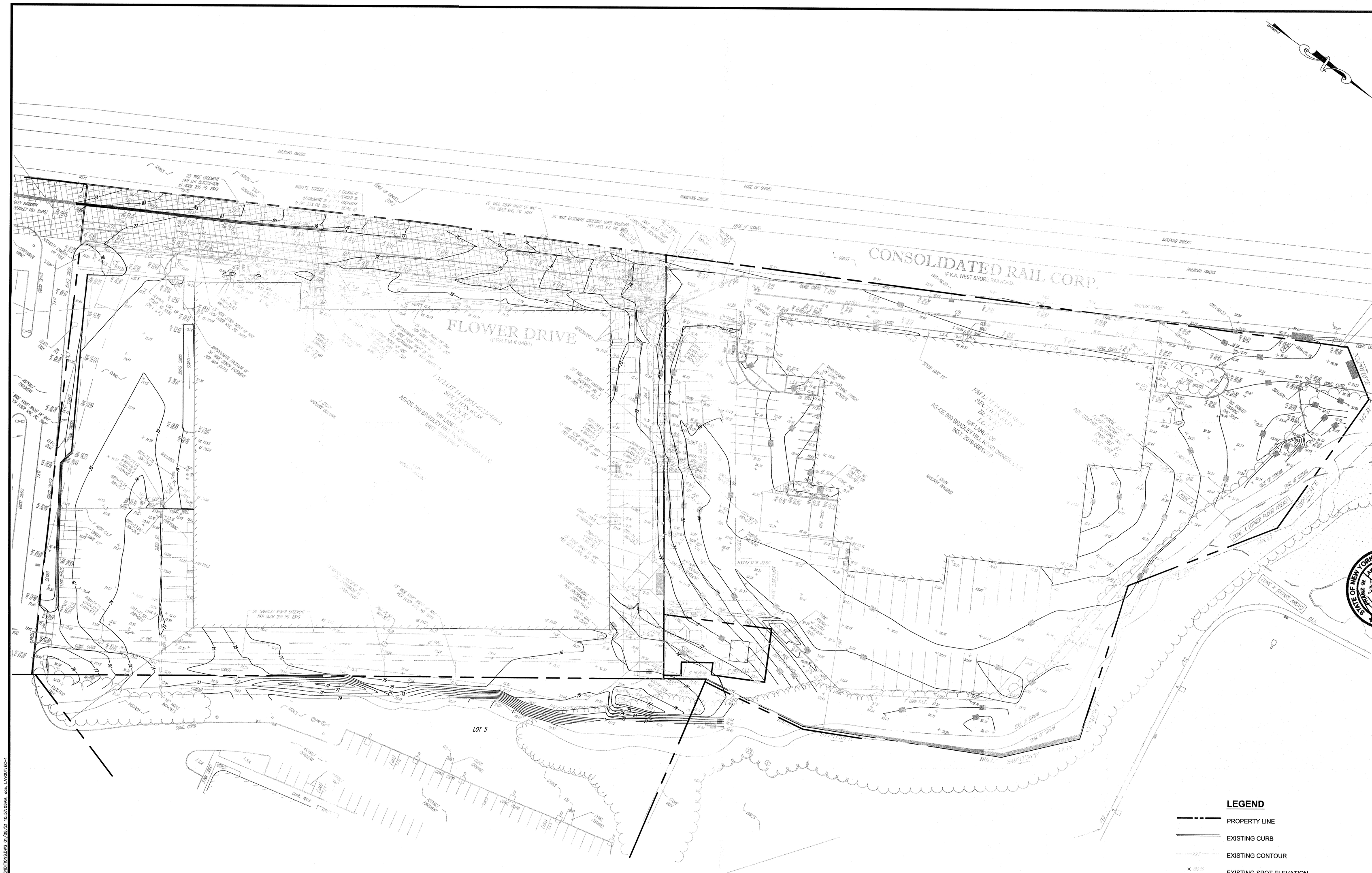

Scale: 1"= 40'

0 20 40 80 120 160

NYS Education Law
Unauthorized alterations or additions to this plan are a violation of section 7209 (2) of the New York State Education Law. Copies of this map not having the seal of the engineer shall not be valid.

© SESI CONSULTING ENGINEERS D.P.C. 2020
This drawing and all information contained here on is proprietary information of SESI CONSULTING ENGINEERS D.P.C. and may not be copied or reproduced, either in whole or in part, by any method, without written permission of SESI CONSULTING ENGINEERS D.P.C.

REFERENCE:

1. EXIST CONDITIONS & BOUNDARY FOR 700 BRADLEY HILL ROAD ARE TAKEN FROM DRAWING ENTITLED "BOUNDARY AND TOPOGRAPHIC SURVEY FOR SECTION 65.18, BLOCK 1, LOT 4, 700 BRADLEY HILL ROAD - 'BUILDING #3'," PREPARED BY CONTROL POINT ASSOCIATES, INC, DATED 8/3/2020
2. EXIST CONDITIONS & BOUNDARY FOR 800 BRADLEY HILL ROAD ARE TAKEN FROM DRAWING ENTITLED "BOUNDARY AND TOPOGRAPHIC SURVEY FOR SECTION 65.18, BLOCK 1, LOT 3, 800 BRADLEY HILL ROAD - 'BUILDING #4'," PREPARED BY CONTROL POINT ASSOCIATES, INC, DATED 8/3/2020

rev	date	description	by
1	10/20/20	REV PER TOWNSHIPS REVIEW LTRS DATED 10/21/20 AND 10/27/20	RGM

dwg by: YY
chk by: FL
scale: AS NOTED
date: 8/31/2020

SESI CONSULTING ENGINEERS
SOILS / FOUNDATIONS
SITE DESIGN
ENVIRONMENTAL
12A MAPLE AVE, PINE BROOK, N.J. 07058 PH: 973-808-9080

STATE OF NEW YORK · FRANZ W. LAKI · 098772 · LICENSED PROFESSIONAL ENGINEER

FRANZ W. LAKI, P.E.
PROFESSIONAL ENGINEER
N.Y. LIC. NO. 98772

700 & 800 BRADLEY HILL ROAD
SECTION 65.18, BLOCK 1, LOTS 3 & 4
TOWN OF ORANGETOWN, ROCKLAND COUNTY, N.Y.

title: EXISTING CONDITIONS

job no. 10642
drawing no. EC-1

H:\CAD\10642\10642-700 BRADLEY EXISTING CONDITIONS.DWG 01/06/21 10:51:05AM, Cons, LAYOUT:EC-1

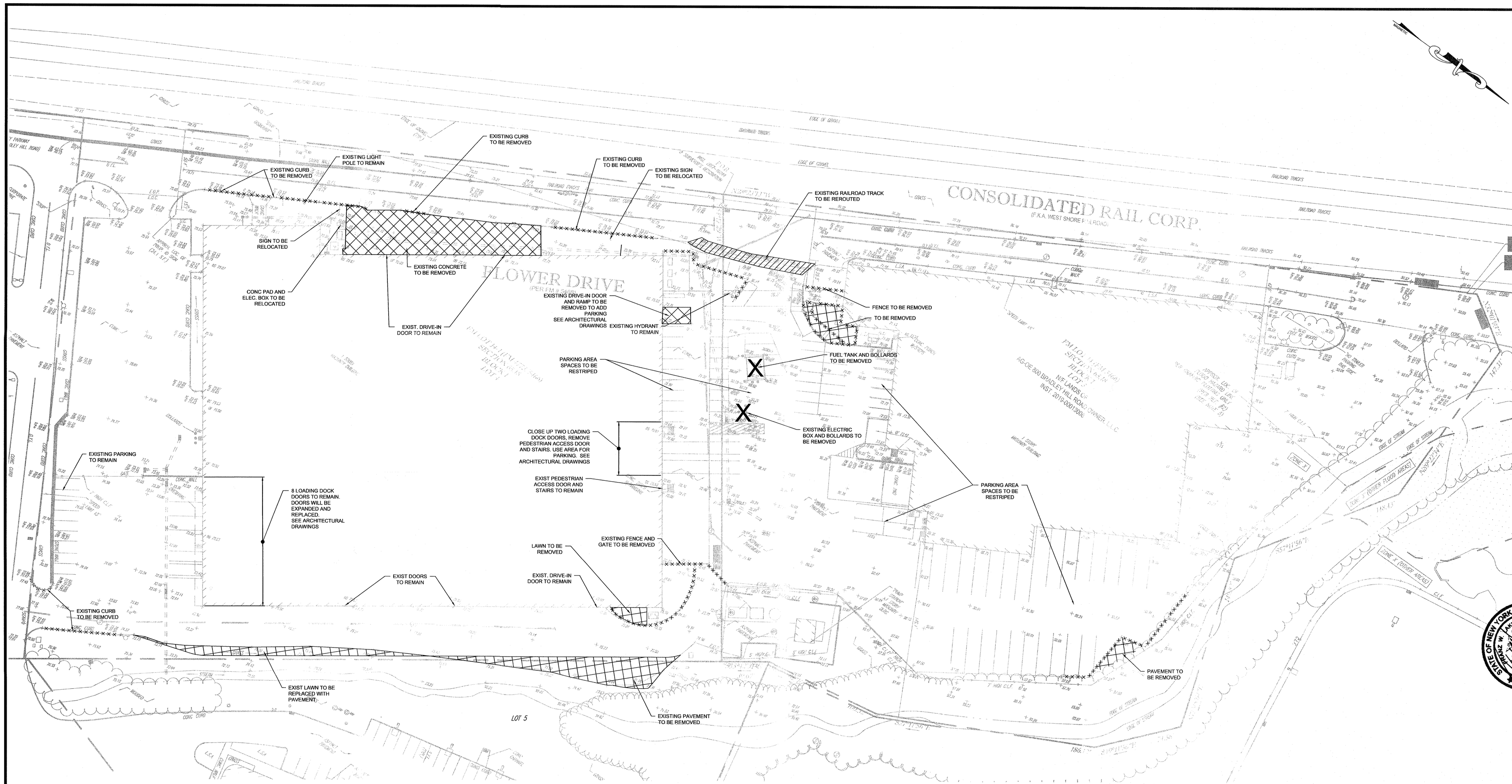

DEMOLITION NOTES:

1. THE REMOVAL OF ALL WASTE ITEMS, EXCESS FILL, ASPHALT, FENCING, CONCRETE, ETC. SHALL BE DISPOSED OF AT LICENSED LANDFILLS .
2. ALL ITEMS DISTURBED BY DEMOLITION, SAW CUTTING, EXCAVATION, ETC... THAT ARE TO REMAIN SHALL BE REPLACED, RESET, OR RECONSTRUCTED AS REQUIRED TO RESTORE STRUCTURAL INTEGRITY AND SUITABLE APPEARANCE AT NO EXTRA CHARGE.
3. A SMOOTH UNIFORM EDGE MUST BE PROVIDED ALONG THE LIMIT OF PAVEMENT REMOVAL. THE CONTRACTOR SHALL SAW CUT THE PAVEMENT ALONG THE LIMIT OF PAVEMENT REMOVAL.
4. REMOVE ALL OBSTRUCTIONS WITHIN THE LIMIT OF SITE CONSTRUCTION INCLUDING PAVEMENT, CURB & GUTTER SIDEWALKS, SIGNS, FENCES, TREES, CONCRETE SLABS, WALLS, DEBRIS, AND FOLIAGE.
5. INSTALL SOIL EROSION AND SEDIMENT CONTROL MEASURES PRIOR TO ANY LAND DISTURBANCE. ADHERE TO ALL LOCAL SOIL DISTRICT STANDARDS.
6. REMOVE EXISTING TREES AND VEGETATION AS REQUIRED. DO NOT DISTURB OR REMOVE EXISTING TREES OUTSIDE LIMIT OF WORK OR DESIGNATED TO BE PROTECTED.
7. AFTER DEMOLITION OF EXISTING SIDEWALK AND ASPHALT, CONTRACTOR SHALL COMPACT THE SUBGRADE WITH A SUITABLE COMPACTOR.
8. THE VOIDS CREATED BY EXCAVATION OF STRUCTURES DURING SITE DEMOLITION SHALL BE BACKFILLED WITH DENSE GRADED AGGREGATE AND COMPACTED TO 95% MODIFIED PROCTOR DENSITY.
9. THE CONTRACTOR SHALL BE RESPONSIBLE TO CONTACT ALL THE VARIOUS UTILITY COMPANIES TO VERIFY THE EXISTANCE, LIMITS, AND/OR LOCATIONS OF ANY UTILITIES AND/OR FACILITIES THAT MAY BE ALONG OR WITHIN THE VICINITY OF THIS IMPROVEMENT.
10. THE DEMOLITION INFORMATION PROVIDED MAY NOT REPRESENT ALL DEMOLITION NECESSARY FOR CONSTRUCTION. IT IS THE RESPONSIBILITY OF THE CONTRACTOR TO DETERMINE THE FULL EXTENT OF THE PRUJECT DEMOLITION AND CONSTRUCTION ABOVE GROUND AND BELOW.
11. ALL WORK SHOWN ON THE DRAWINGS SHALL BE FIELD MEASURED AND OTHERWISE VERIFIED THROUGH FIELD EXPLORATIONS MADE DURING THE DEMOLITION PHASE. IN THE EVENT OF CONFLICT PERTAINING TO PLAN OR ELEVATION DIMENSIONS, THE ENGINEER SHOULD BE IMMEDIATELY NOTIFIED SO THAT THE ENGINEER CAN RESOLVE ANY CONFLICT.
12. PRIOR TO COMMENCING WITH ANY DEMOLITION WORK, THE CONTRACTOR SHALL SECURE ALL REQUIRED PERMITS.
13. IN AREAS WHERE UTILITY DEPTHS REQUIRE VERIFICATION, THE CONTRACTOR SHALL EXCAVATE TEST PITS AFTER THE UTILITY MARK-OUT.
14. THE CONTRACTOR SHALL CONTACT THE LOCAL UTILITY COMPANY IMMEDIATELY AFTER RECEIVING A "NOTICE TO PROCEED" FROM THE OWNER.
15. SCHEDULE WITH THE OWNER ALL NOISE PRODUCING CONSTRUCTION ACTIVITIES SUCH AS JACK HAMMERING, SAW CUTTING, ETC...
16. CONTRACTOR IS RESPONSIBLE TO PHASE WORK SO THAT VEHICULAR AND PEDESTRIAN ACCESS IS PROVIDED TO THE BUILDING, TENANT SPACES, AND CROSSWALKS AT ALL TIMES.
17. CONTRACTOR SHALL PROVIDE ALL PROTECTION FOR PEDESTRIAN AND VEHICULAR TRAFFIC DURING CONSTRUCTION INCLUDING BUT NOT LIMITED TO BARRICADES, FLAGGERS, ETC...
18. PRIOR TO CONSTRUCTION, ALL EXISTING UTILITIES SHALL BE FIELD VERIFIED BY GENERAL CONTRACTOR.
19. ALL EXISTING ON-SITE WELLS SHALL BE ABANDONED IN ACCORDANCE WITH APPLICABLE RULES AND REGULATIONS.
20. SEE SOIL EROSION CONTROL PLAN FOR APPROX. LIMITS OF DISTURBANCE AND SEDIMENT FILTER FENCE LOCATION.

NYS Education Law
Unauthorized alterations or additions to this plan are a violation of section 7209 (2) of the New York State Education Law. Copies of this map not having the seal of the engineer shall not be valid.

© SESI CONSULTING ENGINEERS D.P.C. 2020
This drawing and all information contained here on is proprietary information of SESI CONSULTING ENGINEERS D.P.C. and may not be copied or reproduced, either in whole or in part, by any method, without written permission of SESI CONSULTING ENGINEERS D.P.C.

REFERENCE:

1. EXIST CONDITIONS & BOUNDARY FOR 700 BRADLEY HILL ROAD ARE TAKEN FROM DRAWING ENTITLED "BOUNDARY AND TOPOGRAPHIC SURVEY FOR SECTION 65.18, BLOCK 1, LOT 4, 700 BRADLEY HILL ROAD - 'BUILDING #3'," PREPARED BY CONTROL POINT ASSOCIATES, INC, DATED 8/3/2020
2. EXIST CONDITIONS & BOUNDARY FOR 800 BRADLEY HILL ROAD ARE TAKEN FROM DRAWING ENTITLED "BOUNDARY AND TOPOGRAPHIC SURVEY FOR SECTION 65.18, BLOCK 1, LOT 3, 800 BRADLEY HILL ROAD - 'BUILDING #4'," PREPARED BY CONTROL POINT ASSOCIATES, INC, DATED 8/3/2020

LEGEND

	PROPERTY LINE
	EXISTING CURB
127	EXISTING CONTOUR
× 126.25	EXISTING SPOT ELEVATION
X	TO BE REMOVED
	CURB TO BE REMOVED
	MACADAM TO BE REMOVED
TBR	TO BE REMOVED
	TREE PROTECTION FENCE

Scale: 1"= 40'

0 20 40 80 120 160

rev	date	description	by
1	10/20/20	REV PER TOWNSHIP'S REVIEW LTRS DATED 10/21/20 AND 10/27/20	RDM

drwg by: YY
chk by: FL
scale: AS NOTED
date: 8/31/2020

SESI
CONSULTING ENGINEERS
SOILS / FOUNDATIONS
SITE DESIGN
ENVIRONMENTAL
12A MAPLE AVE, PINE BROOK, N.J. 07058 PH. 973-808-9060

FRANZ W. LAKI, P.E.
PROFESSIONAL ENGINEER
N.Y. LIC. NO. 86772

700 & 800 BRADLEY HILL ROAD
SECTION 65.18, BLOCK 1, LOTS 3 & 4
TOWN OF ORANGETOWN, ROCKLAND COUNTY, N.Y.

title: DEMOLITION PLAN

job no. 10642
drawing no. DE-1

J:\L\LAKI\10642\10642-700 BRADLEY EXISTING CONDITIONS.DWG 01/06/21 02:58:42AM sze LAYOUT:DE-1

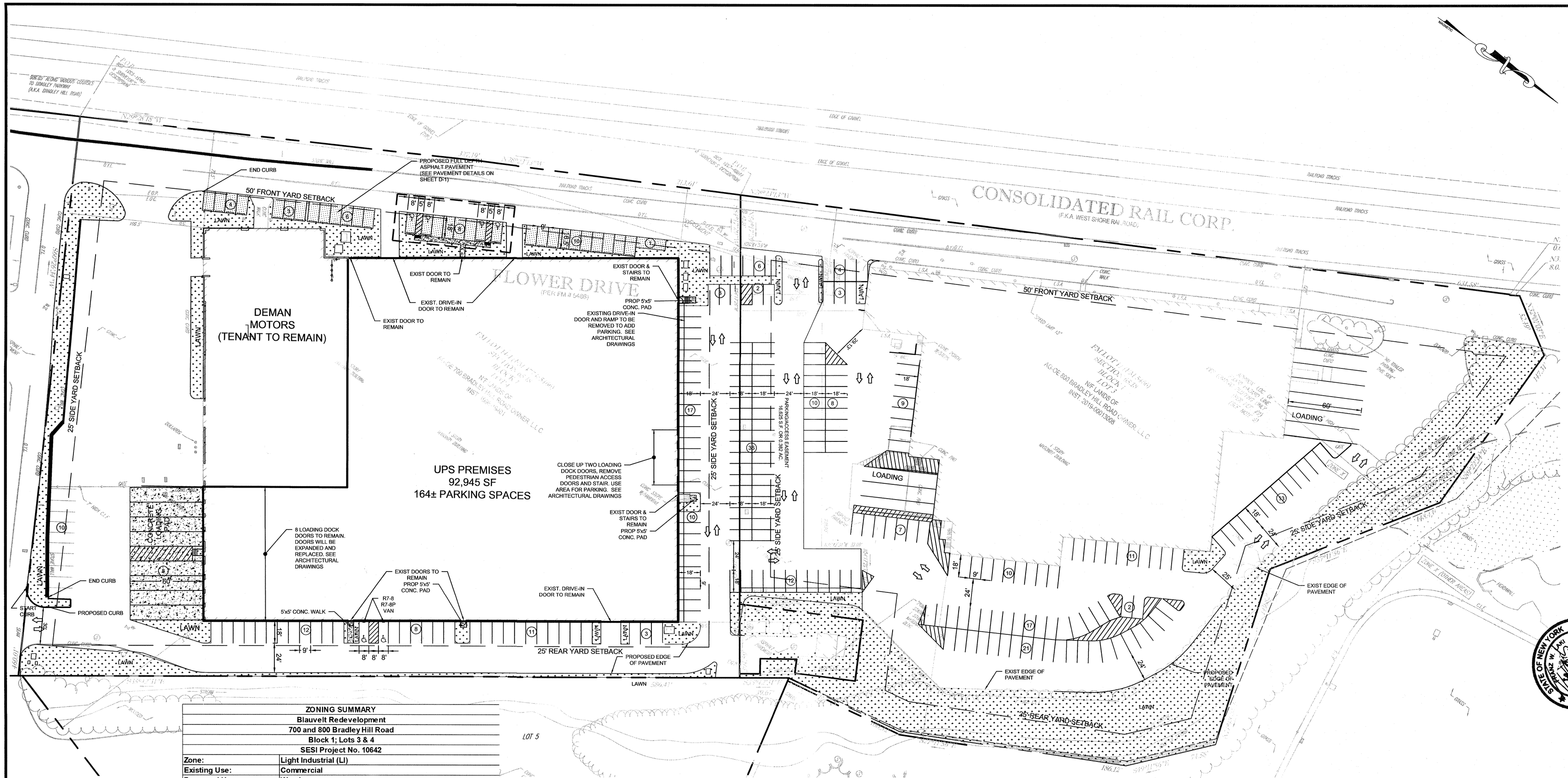

ZONING SUMMARY	
Blauvelt Redevelopment	
700 and 800 Bradley Hill Road	
Block 1; Lots 3 & 4	
SESI Project No. 10642	
Zone:	**Light Industrial (LI)**
Existing Use:	**Commercial**
Proposed Use:	**Warehouse**
Permitted Use:	**Yes**

ITEM	REQUIRED	EXISTING LOT 4 (700)	EXISTING LOT 3 (800)	PROPOSED LOT 4 (700)	PROPOSED LOT 3 (800)	NOTES
MIN. LOT WIDTH (FT)	150	540.8	640	540.8	640	No Change
MIN. LOT AREA (AC)	2	5.53	4.89	5.53	4.89	No Change
MIN. STREET FRONTAGE (FT)	150	540.8	640	540.8	640	No Change
MIN. FRONT YARD (FT)	50	58.3	42.6	58.3	42.6	No Change
MIN. SIDE YARD (FT)*	25	50.0	50.8	50	50.8	No Change
TOTAL SIDE YARD (FT)*	100	159.6	151.9	159.6	151.9	No Change
MIN. REAR YARD (FT)***	25	44.97	149.1	44.97	149.1	No Change
MAX. LOT COVERAGE (%)	80%	89.1%	80.6%	89.1%	80.6%	No Change
MAX. FLOOR AREA RATIO**	0.5	0.486	0.277	0.486	0.277	No Change
MAX. HEIGHT (FT)*	25	26	34	26	34	No Change
MIN. OFF-STREET PARKING****	105	27	47	162	115	Complies

*Note 7: Required front yards and maximum building heights are subject to § 5.111, within the designated street line being used as lot line.

*Note 10: Where a lot line in an LO, LI or LIO District abuts a railroad right-of-way, the normally required rear or side yard may be reduced to twenty-five (25) feet, and the maximum building height shall apply for that portion of a building over twenty-five (25) feet in height

**Note 14:Maximum land coverage shall not exceed seventy-five percent (75%), including buildings, parking, road and road widening. The open area shall be a minimum of twenty-five percent (25%). Parking area within a building will not be charged against the floor area ratio. In OP Districts, the percentages shall be sixty-five percent (65%) and thirty-five percent (35%), respectively. In LO Districts, W Groups, and MFR District, U Group, the percentages shall be fifty percent (50%) and fifty percent (50%), respectively. In LI Districts, the percentages shall be eighty percent (80%) and twenty percent (20%), respectively.

*** Note 2:Where the side or rear lot line of a lot in CS, CC, CO, LO, LIO, LI or OP adjoins or lies within twenty-five (25) feet of any R District, the following buffers shall be required: LO, LIO, LI or OP = 100 feet
The Planning Board may reduce by no more than fifty percent (50%) the side or rear yard requirement for the yard opposite the buffer for nonresidential uses in the LO, LIO, LI and OP Districts, except where the opposite yard abuts a residential district. All such uses shall conform to these buffer requirements. For the CS and CC Districts fifty (50) and twenty-five (25) feet, respectively, will be required for a conditional or special permit use. The buffer area shall only be used for planting, landscaping and screening to provide environmental compatibility of dissimilar uses.

**** Parking requirement was calculated using 1 space per 2 employees. A peak demand of 210 employees required 105 parking spaces.

PARKING SUMMARY:

700 BRADLEY HILL ROAD

PROPOSED ON-SITE PARKING:	110 SPACES
PROPOSED IN -EASEMENT PARKING:	52 SPACES
TOTAL SPACES:	162 SPACES

800 BRADLEY HILL ROAD:

PROPOSED ON-SITE PARKING:	115 SPACES

NOTES:

1. PARKING SPACES WITHIN THE PARKING AREA EASEMENT ARE RESERVED FOR THE USE OF UPS AT 700 BRADLEY HILL ROAD.

REFERENCE:

1. EXIST CONDITIONS & BOUNDARY FOR 700 BRADLEY HILL ROAD ARE TAKEN FROM DRAWING ENTITLED "BOUNDARY AND TOPOGRAPHIC SURVEY FOR SECTION 65.18, BLOCK 1, LOT 4, 700 BRADLEY HILL ROAD - 'BUILDING #3'," PREPARED BY CONTROL POINT ASSOCIATES, INC, DATED 8/3/2020
2. EXIST CONDITIONS & BOUNDARY FOR 800 BRADLEY HILL ROAD ARE TAKEN FROM DRAWING ENTITLED "BOUNDARY AND TOPOGRAPHIC SURVEY FOR SECTION 65.18, BLOCK 1, LOT 3, 800 BRADLEY HILL ROAD - 'BUILDING #4'," PREPARED BY CONTROL POINT ASSOCIATES, INC, DATED 8/3/2020

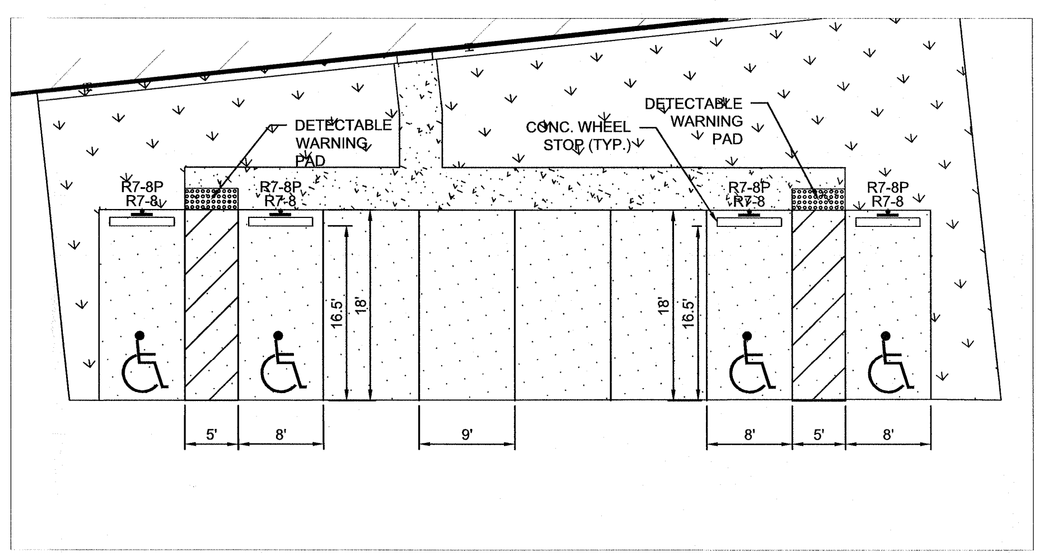

ENLARGED PLAN
SCALE: 1"=10'

LEGEND

- PROPERTY LINE
- SETBACK LINE
- EXISTING EDGE OF PAVEMENT
- PROPOSED EDGE OF PAVEMENT
- PROPOSED CURB
- PROPOSED ADA CURB/ FLUSH CURB
- PROPOSED CONC. FLATWORK
- (5) PROPOSED NO. OF PARKING SPACES
- TRAFFIC CIRCULATION
- PROPOSED FULL DEPTH ASPHALT PAVEMENT
- PROPOSED LAWN

Scale: 1"= 40'
0 20 40 80 120 160

rev	date	description	by
1	10/30/20	REV PER TOWNSHIPS REVIEW LTRS DATED 10/21/20 AND 10/27/20	RDM

dwg by: YY
chk by: FL
scale: AS NOTED
date: 8/31/2020

SESI CONSULTING ENGINEERS
SOILS / FOUNDATIONS
SITE DESIGN
ENVIRONMENTAL
12A MAPLE AVE. PINE BROOK, N.J. 07058 PH: 973-808-9050

STATE OF NEW YORK · FRANZ W. LAKI · 096772 · LICENSED PROFESSIONAL ENGINEER

FRANZ W. LAKI, P.E.
PROFESSIONAL ENGINEER
N.Y. LIC. NO. 96772

700 & 800 BRADLEY HILL ROAD
SECTION 65.18, BLOCK 1, LOTS 3 & 4
TOWN OF ORANGETOWN, ROCKLAND COUNTY, N.Y.

title: SITE PLAN

job no. 10642
drawing no. S-1

NYS Education Law
Unauthorized alterations or additions to this plan are a violation of section 7209 (2) of the New York State Education Law. Copies of this map not having the seal of the engineer shall not be valid.
© SESI CONSULTING ENGINEERS D.P.C. 2021
This drawing and all information contained here on is proprietary information of SESI CONSULTING ENGINEERS D.P.C. and may not be copied or reproduced, either in whole or in part, by any method, without written permission of SESI CONSULTING ENGINEERS D.P.C.

I:\LACAD\10642\10642-700 BRADLEY SITE.dwg 01/29/21 10:52:24AM, ezds, LAYOUT S-1

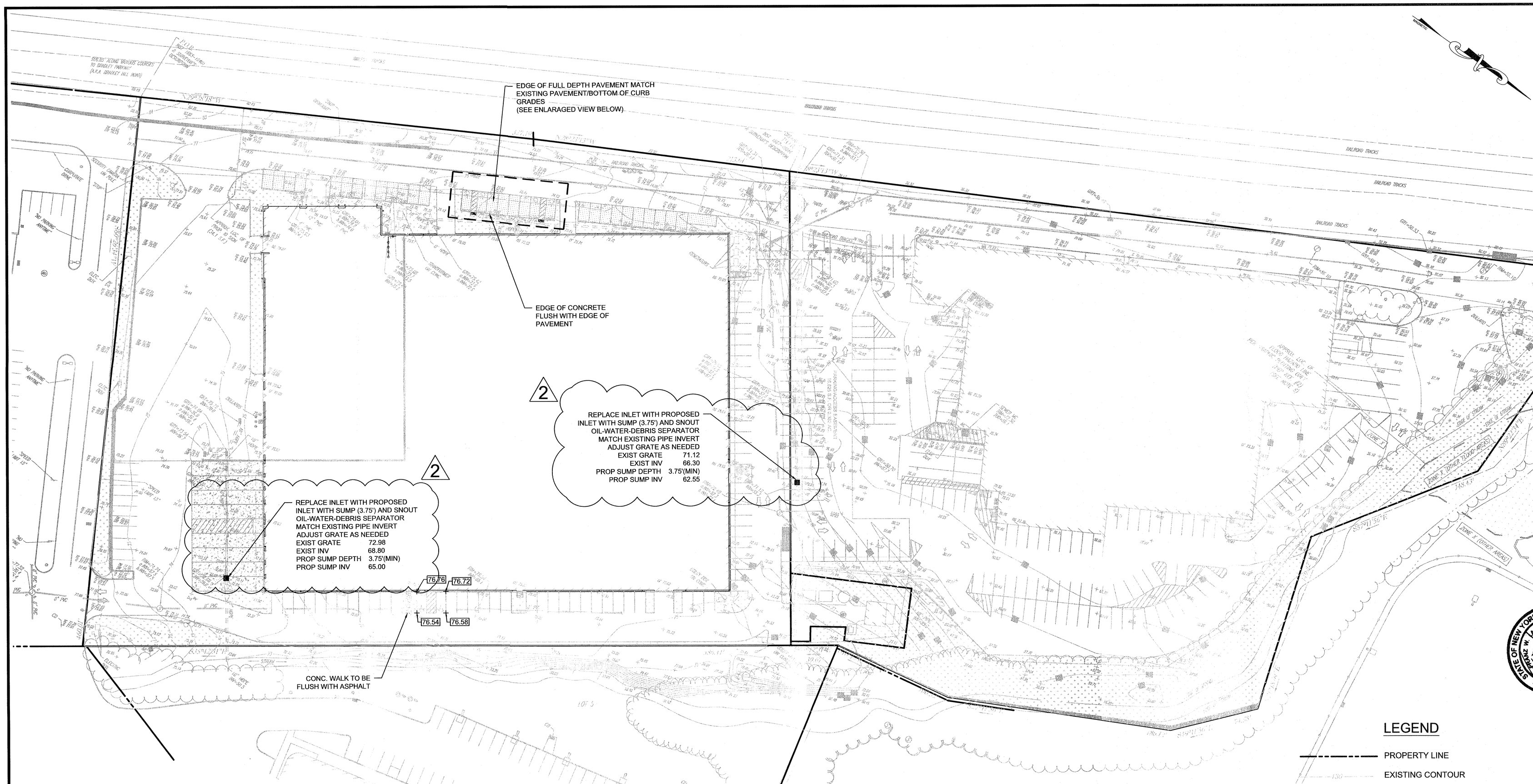

NOTES:

1. ALL ASPHALT IS TO BE MILLED AND REPAVED TO A MINIMUM DEPTH OF 2 INCHES, UNLESS OTHERWISE NOTED.
2. FINISHED GRADES SHALL MATCH EXISTING GRADES, UNLESS OTHERWISE NOTED
3. EXISTING STORMWATER FLOW PATHS SHALL BE MAINTAINED UNLESS OTHERWISE NOTED.
4. EDGE OF PAVEMENT GRADES SHALL MATCH ADJACENT PAVEMENT/CONCRETE/LAWN GRADES
5. GRADES AT ADA PARKING SPACES SHALL NOT EXCEED 2% IN ANY DIRECTION
6. FOR FULL DEPTH ASPHALT PAVEMENT, PLEASE SEE PAVEMENT DETAILS ON SHEET D-1.
7. FOR AREAS TO BE MILLED AND RE-PAVED, PAVEMENT DETAILS ON SHEET D-1.

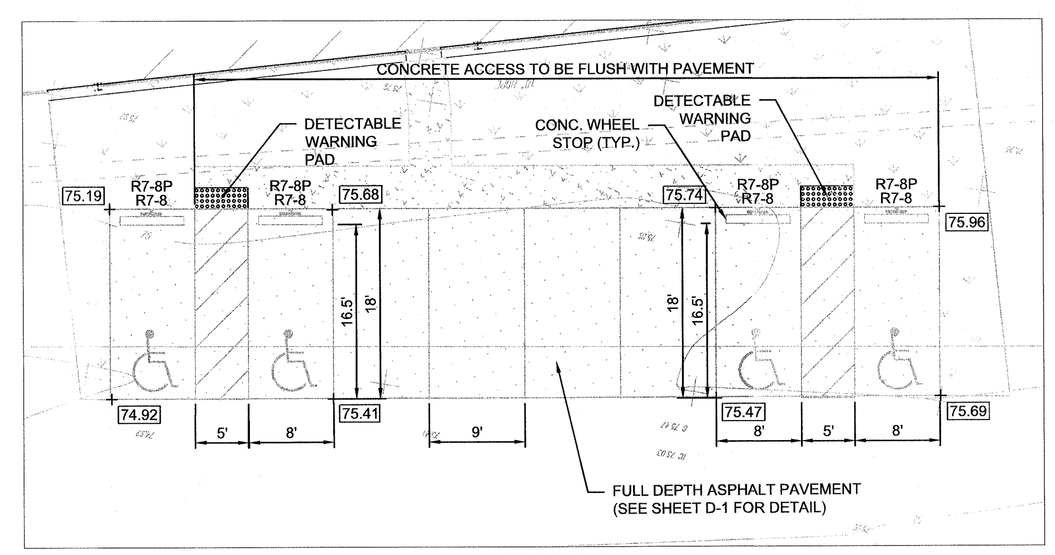

ENLARGED PLAN

SCALE: 1"=10'

LEGEND

- PROPERTY LINE
- EXISTING CONTOUR
- EXISTING SPOT ELEVATION
- PROPOSED CONTOUR
- PROPOSED SPOT ELEVATION
- EXISTING STORM LINE
- EXISTING SANITARY LINE
- EXISTING WATER MAIN
- EXISTING GAS SERVICE
- EXISTING ELECTRIC SERVICE
- EXISTING UTILITY SERVICE
- EXISTING STORM MANHOLE

Scale: 1"= 40'

0 20 40 80 120 160

REFERENCE:

1. EXIST CONDITIONS & BOUNDARY FOR 700 BRADLEY HILL ROAD ARE TAKEN FROM DRAWING ENTITLED "BOUNDARY AND TOPOGRAPHIC SURVEY FOR SECTION 65.18, BLOCK 1, LOT 4, 700 BRADLEY HILL ROAD - 'BUILDING #3'," PREPARED BY CONTROL POINT ASSOCIATES, INC, DATED 8/3/2020
2. EXIST CONDITIONS & BOUNDARY FOR 800 BRADLEY HILL ROAD ARE TAKEN FROM DRAWING ENTITLED "BOUNDARY AND TOPOGRAPHIC SURVEY FOR SECTION 65.18, BLOCK 1, LOT 3, 800 BRADLEY HILL ROAD - 'BUILDING #4'," PREPARED BY CONTROL POINT ASSOCIATES, INC, DATED 8/3/2020

NYS Education Law
Unauthorized alterations or additions to this plan are a violation of section 7209 (2) of the New York State Education Law. Copies of this map not having the seal of the engineer shall not be valid.

© SESI CONSULTING ENGINEERS D.P.C. 2021
This drawing and all information contained here on is proprietary information of SESI CONSULTING ENGINEERS D.P.C. and may not be copied or reproduced, either in whole or in part, by any method, without written permission of SESI CONSULTING ENGINEERS D.P.C.

N:\CAD\10642\10642- 700 BRADLEY @BADINGDWG 07/09/21 10:54:39AM, eas, LAYOUT:G-1

rev	date	description	by
2	01/05/21	ADD OIL SEPARATORS	
1	10/30/20	REV PER TOWNSHIPS REVIEW LTRS DATED 10/21/20 AND 10/27/20	RDM

drwg by: RDM
chk by: FL
scale: AS NOTED
date: 8/31/2020

SESI
CONSULTING ENGINEERS
SOILS / FOUNDATIONS
SITE DESIGN
ENVIRONMENTAL
12A MAPLE AVE, PINE BROOK, N.J. 07058 PH: 973-808-9050

STATE OF NEW YORK · FRANZ W. LAKI · 096772 · LICENSED PROFESSIONAL ENGINEER

FRANZ W. LAKI, P.E.
PROFESSIONAL ENGINEER
N.Y. LIC. NO. 96772

700 & 800 BRADLEY HILL ROAD
SECTION 65.18, BLOCK 1, LOTS 3 & 4
TOWN OF ORANGETOWN, ROCKLAND COUNTY, N.Y.

title: GRADING AND UTILITIES PLAN

job no. 10642
drawing no. G-1

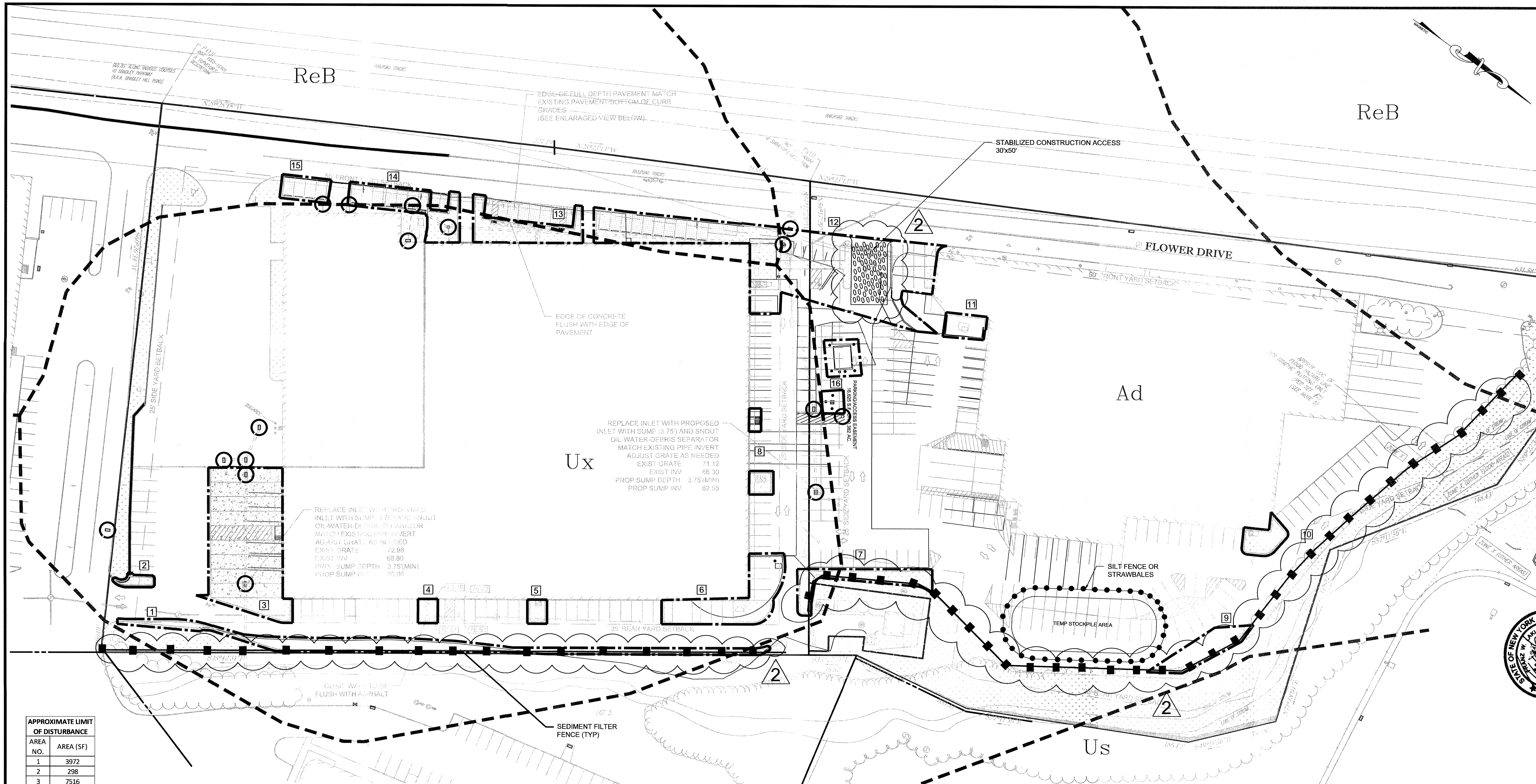

APPROXIMATE LIMIT OF DISTURBANCE	
AREA NO.	AREA (SF)
1	3972
2	298
3	7516
4	329
5	325
6	2928
7	1612
8	581
9	1360
10	814
11	679
12	12518
13	1917
14	2227
15	795
16	2117
TOTAL (SF)	39988
TOTAL (AC)	0.92

NOTES:

1. EXISTING STORMWATER FLOW PATHS SHALL BE MAINTAINED UNLESS OTHERWISE NOTED.
2. ALL INLETS SHALL RECEIVE INLET PROTECTION MEASURES IN AND ADJACENT TO WORK AREAS. ALL LOCATIONS MAY NOT SHOW ON THIS PLAN.

CONSTRUCTION SEQUENCE:

- OBTAIN ALL PERMITS
- PRE-CONSTRUCTION MEETING
- NOTIFY MUNICIPALITY AND REGULATORY AGENCIES OF THE START OF CONSTRUCTION
- INSTALL ALL SOIL EROSION CONTROL MEASURES (INLET PROTECT, SILT FENCE, HAYBALES, ETC)
- GENERAL DEMOLITION AND REMOVAL
- MILLING
- FULL DEPTH PAVEMENT INSTALLATION
- CONCRETE FLATWORK
- PAVING AND STRIPING
- TOPSOIL AND SEED ALL LAWN AREAS
- REMOVE SOIL EROSION CONTROL MEASURES

REFERENCE:

1. EXIST CONDITIONS & BOUNDARY FOR 700 BRADLEY HILL ROAD ARE TAKEN FROM DRAWING ENTITLED "BOUNDARY AND TOPOGRAPHIC SURVEY FOR SECTION 65.18, BLOCK 1, LOT 4, 700 BRADLEY HILL ROAD - 'BUILDING #3'," PREPARED BY CONTROL POINT ASSOCIATES, INC, DATED 8/3/2020
2. EXIST CONDITIONS & BOUNDARY FOR 800 BRADLEY HILL ROAD ARE TAKEN FROM DRAWING ENTITLED "BOUNDARY AND TOPOGRAPHIC SURVEY FOR SECTION 65.18, BLOCK 1, LOT 3, 700 BRADLEY HILL ROAD - 'BUILDING #4'," PREPARED BY CONTROL POINT ASSOCIATES, INC, DATED 8/3/2020

NYS Education Law
Unauthorized alterations or additions to this plan are a violation of section 7209 (2) of the New York State Education Law. Copies of this map not having the seal of the engineer shall not be valid.
© SESI CONSULTING ENGINEERS D.P.C. 2021
This drawing and all information contained here on is proprietary information of SESI CONSULTING ENGINEERS D.P.C. and may not be copied or reproduced, either in whole or in part, by any method, without written permission of SESI CONSULTING ENGINEERS D.P.C.

SOIL EROSION AND SEDIMENT CONTROL NOTES

1) DESCRIPTION OF WORK
PROVIDE ALL MEANS NECESSARY TO INSTALL, INSPECT AND MAINTAIN, AND REMOVE TEMPORARY EROSION AND SEDIMENT CONTROL MEASURES AS SHOWN ON THE DRAWINGS AND AS REQUIRED TO MINIMIZE THE EROSION AND UNSPECIFIED TRANSPORT OF SOIL FROM THE SITE.

2) QUALITY ASSURANCE
A) GENERAL
I. INSTALL AND MAINTAIN IN COMPLIANCE WITH THE NEW YORK STATE DEPARTMENT OF ENVIRONMENTAL CONSERVATION GENERAL PERMIT FOR STORM WATER DISCHARGES FROM CONSTRUCTION ACTIVITIES.
1) RETAIN A COPY OF THE PROJECT'S NOTICE ON INTENT (NOI); A BRIEF DESCRIPTION OF THE PROJECT, POSTED IN A PROMINENT PLACE FOR PUBLIC VIEWING; AND A COPY OF THE PROJECT'S STORM WATER POLLUTION PREVENTION PLAN (SWPPP) AT THE CONSTRUCTION SITE FROM THE DATE OF INITIATION OF CONSTRUCTION ACTIVITIES TO THE DATE OF THE NOTICE OF TERMINATION (NOT) SUBMISSION.
II. INSTALL IN ACCORDANCE WITH THE DRAWINGS OR NEW YORK STANDARDS AND SPECIFICATIONS FOR SOIL EROSION & SEDIMENT CONTROL, AUGUST 2005 (N.Y. GUIDELINES) OR THE EROSION AND SEDIMENT CONTROL BEST MANAGEMENT PRACTICES MANUAL SERIES, WESTCHESTER COUNTY, NY, 1991 (W.C. GUIDELINES), WHICHEVER IS STRICTER.
III. GRADE AND MAINTAIN SITE AT ALL TIMES SUCH THAT ALL STORM WASTE RUNOFF FROM DISTURBED AREAS IS DIVERTED TO SOIL EROSION AND SEDIMENTATION CONTROL FACILITIES.
IV. NO CHANGES TO THE SOIL EROSION AND SEDIMENTATION CONTROL PLAN SHALL BE MADE WITHOUT APPROVAL OF THE OWNER'S REPRESENTATIVE.
V. NO MORE THAN 5 ACRES OF SOIL, NOT PROTECTED BY EROSION AND SEDIMENTATION CONTROL MEASURES, CAN BE DISTURBED AT ANY TIME.
VI. THE CONTRACTOR SHALL COMPLY WITH APPLICABLE FEDERAL, STATE, AND LOCAL REGULATIONS RELATING TO THE PREVENTION AND ABATEMENT OF POLLUTION.
B) PRODUCT DATA: SUBMIT MANUFACTURER'S CATALOGUE CUTS, SPECIFICATIONS AND INSTALLATION INSTRUCTIONS FOR SILT FENCES, FILTER FABRICS, EROSION CONTROL BLANKETS, TRASH RACKS, ANTI-SEEP COLLARS, AND SEDIMENT BASIN RISER AND BARREL PIPES.

2) WORK SCHEDULE
A) PRECONSTRUCTION PHASE:
I. INSTALL STABILIZED CONSTRUCTION ENTRANCE.
II. PRIOR TO CLEARING VEGETATION IN WATERSHED, INSTALL PERIMETER SILT FENCE/HAY BALES AND SILT FENCE.
III. PRIOR TO GRUBBING AND GRADING WITHIN A SPECIFIC WATER SHED INSTALL:
1) TEMPORARY SEDIMENT BASINS, AND
2) TEMPORARY EARTH DIKES/SWALES
B) CONSTRUCTION PHASE:
I. INSPECT AND MAINTAIN EROSION AND SEDIMENT CONTROL MEASURES UNTIL THEIR REMOVAL AS SPECIFIED. INSPECT MEASURES AT LEAST ONCE A WEEK AND WITHIN 24 HOURS OF THE END OF A 0.5 INCH OR GREATER STORM EVENT. STABILIZED AREAS WILL BE INSPECTED MONTHLY UNTIL THE ENTIRE SITE IS STABILIZED. MAINTENANCE WILL BE COMPLETED WITHIN 7 CALENDAR DAYS OF DETERMINING ITS NEED.
II. WHEN EXCESS SOIL FROM EARTHWORK ACTIVITIES OCCURS, CONSTRUCT AND STABILIZE SOIL STOCKPILES.
III. PROVIDE DUST CONTROL.
IV. KEEP PAVED ROADWAYS CLEAN AT ALL TIMES.
V. TEMPORARILY STABILIZE AS SPECIFIED.
VI. FOLLOWING FINISH GRADING, INSTALL TEMPORARY OR PERMANENT STABILIZATION.
VII. IMMEDIATELY FOLLOWING THE INSTALLATION OF CATCH BASIN INLETS INSTALL INLET PROTECTION.
C) POST CONSTRUCTION PHASE:
I. STABILIZE WATERSHED AND HAVE OWNER'S REPRESENTATIVE REVIEW AND APPROVE.
II. REMOVE TEMPORARY EARTH DIKES AND VEGETATE AND PERMANENTLY STABILIZE THE RELATED DISTURBED AREAS.
III. REMOVE SEDIMENT BASINS AND VEGETATE AND PERMANENTLY STABILIZE THE RELATED DISTURBED AREA.
IV. HAVE OWNER'S REPRESENTATIVE REVIEW AND APPROVE STABILIZATION OF AREAS NOTED ABOVE.
V. REMOVE PERIMETER SILT FENCE AND VEGETATE AND STABILIZE THE RELATED DISTURBED AREA.
VI. ALL STORM DRAINAGE OUTLETS WILL BE STABILIZED, AS REQUIRED, BEFORE THE DISCHARGE POINTS BECOME OPERATIONAL.

4) PRODUCTS AND EXECUTION
A) SEDIMENT BASINS: ALL PIPE CONNECTIONS AND ANTI-SEEP COLLAR CONNECTIONS SHALL BE WATERTIGHT EXCEPT FOR THE RISER TOP INLET OPENING AND DEWATERING HOLES. EMBANKMENT MATERIAL SHALL BE TAKEN FROM APPROVED AREAS AS DIRECTED BY OWNERS REPRESENTATIVE. IT SHALL BE CLEAN MINERAL SOIL FREE OF ROOTS, WOODY VEGETATION, OVERSIZED STONES, ROCKS, OR OTHER OBJECTIONABLE MATERIAL. RELATIVELY PERVIOUS MATERIAL SUCH AS SAND OR GRAVEL SHALL NOT BE PLACED IN THE EMBANKMENT. AREAS ON WHICH FILL IS TO BE PLACED SHALL BE SCARIFIED PRIOR TO PLACEMENT OF FILL. THE FILL MATERIAL SHALL CONTAIN SUFFICIENT MOISTURE SO THAT IT CAN BE FORMED BY HAND INTO A BALL WITHOUT CRUMBLING. IF WATER CAN BE SQUEEZED OUT OF THE BALL THE MATERIALS IS TOO WET FOR PROPER COMPACTION AND UNACCEPTABLE FOR USE IN THE EMBANKMENT. FILL MATERIAL SHALL BE PLACED IN SIX INCH TO EIGHT INCH THICK CONTINUOUS LAYERS OVER THE ENTIRE LENGTH OF THE FILL. COMPACTION SHALL BE OBTAINED BY ROUTING AND HAULING THE CONSTRUCTION EQUIPMENT OVER THE FILL SO THAT THE ENTIRE SURFACE OF EACH LAYER OF THE FILL IS TRAVERSED BY AT LEAST ONE WHEEL OR TREAD TRACK OF THE EQUIPMENT OR BY THE USE OF A COMPACTOR. THE EMBANKMENT SHALL BE CONSTRUCTED TO AN ELEVATION TEN PERCENT HIGHER THAN THE DESIGN HEIGHT TO ALLOW FOR SETTLEMENT.
B) INLET PROTECTION: THE FILTER FABRIC SHALL BE MIRAFI 700X OR EQUAL.
C) EARTH DIKES: COMPACT DIKES WITH EARTH MOVING EQUIPMENT. EROSION CONTROL BLANKETS SHALL BE BONTERRA CS2 OR EQUAL.
D) STABILIZED CONSTRUCTION ENTRANCE: THE FILTER FABRIC SHALL BE MIRAFI 600X OR EQUAL. THE CONTRACTOR SHALL KEEP THE ROADWAYS WITHIN THE PROJECT CLEAR OF SOIL AND DEBRIS AND IS RESPONSIBLE FOR ANY STREET CLEANING NECESSARY DURING THE COURSE OF THE PROJECT.
E) SILT FENCE: SILT FENCE FABRIC SHALL BE MIRAFI 100X OR EQUAL. WOOD POSTS SHALL BE OF SOUND QUALITY HARDWOOD, A MINIMUM 36 INCHES LONG AND TWO INCHES SQUARE. METAL POSTS SHALL BE STANDARD T AND U SECTION WEIGHING NOT LESS THAN ONE POUND PER LINEAR FOOT. WIRE FENCE BACKING SHALL BE A MINIMUM 14-1/2 GAGE WITH A MAXIMUM SIX INCH MESH OPENING AND SECURELY ATTACHED TO FENCE POSTS. POSTS SHALL EXTEND A MINIMUM OF 16 INCHES INTO THE GROUND.
F) HAY BALE BARRIERS: WOOD POSTS SHALL BE OF SOUND QUALITY HARDWOOD, A MINIMUM 36 INCHES LONG. METAL POSTS SHALL BE STANDARD T AND U SECTION WEIGHING NOT LESS THAN ONE POUND PER LINEAR FOOT.
G) TEMPORARY STABILIZATION:
I. ESTABLISHMENT OF TEMPORARY GRASS COVER: PREPARE SEED BED, SCARIFY IF COMPACTED, REMOVE DEBRIS AND OBSTACLES SUCH AS ROCKS AND STUMPS, AND SEED WITHIN 24 HOURS. AMEND SOIL, LIME SOIL TO Ph OF 6.0 AND FERTILIZE AT A RATE OF 14 LBS. PER 1,000 SQUARE FEET WITH A 5-10-10 OR EQUIVALENT FERTILIZER. WORK AMENDMENTS A MINIMUM OF 4 INCHES INTO SOIL. IF SEEDING IN OCTOBER/NOVEMBER SEED SHALL BE CERTIFIED AROOSTOOK WINTER RYE @ 100 LBS. PER ACRE, OTHERWISE SEED SHALL BE RYEGRASS (ANNUAL OR PERENNIAL) @ 30 LBS. PER ACRE.
II. MULCH: SMALL GRAIN STRAW MULCH SHALL BE APPLIED AT A RATE OF TWO TONS (100 TO 120 BALES) PER ACRE. SLOPES GREATER THAN 50% SHALL BE IMMEDIATELY MULCHED WITH EROSION CONTROL BLANKETS. BLANKETS SHALL BE BONTERRA S2 INSTALLED AS RECOMMENDED BY MANUFACTURER.
III. TREAT ALL DISTURBED AREAS WITHIN 500 FEET OF AN INHABITED DWELLING AS NECESSARY TO PROVIDE DUST CONTROL. CONFORM TO ALL LOCAL AND STATE REGULATIONS GOVERNING THESE ACTIVITIES.
IV. INSTALL TEMPORARY STABILIZATION WITHIN 24 HOURS AFTER THE END OF CONSTRUCTION ACTIVITIES IN AN AREA UNLESS THERE IS SNOW COVER OR CONSTRUCTION ACTIVITIES WILL RESUME WITHIN 21 DAYS.
H) CONSTRUCTION VEHICLES: THOROUGHLY WASH DOWN ALL CONSTRUCTION VEHICLES EACH TIME THEY LEAVE THE SITE, AND COVER WITH TARPAULINS AS NECESSARY TO PREVENT VEHICLE TRANSPORT OF SEDIMENT OFF-SITE. DIRECT WASTEWATER FROM WASH DOWN OPERATIONS TO A SEDIMENT BASIN.

5) THE VILLAGE MAY REQUIRE ADDITIONAL EROSION CONTROL MEASURES IF DEEMED APPROPRIATE TO MITIGATE UNFORESEEN SILTATION AND EROSION ON OF DISTURBED SOILS.

N:ACAD\10642\DOC\10642SEC.DOC

LEGEND

- PROPERTY LINE
- STABILIZED CONSTRUCTION ENTRANCE
- APPROX. LIMITS OF DISTURBANCE (0.92 AC)
- SEDIMENT FENCE FENCE
- SOIL TYPE BOUNDARY LINE
- DROP INLET PROTECTION
- Ux — Urban land
- Ad — Alden silt loam
- Reb — Riverhead fine sandy loam, 3 to 8 percent slopes
- Us — Udorthents, smoothed

Scale: 1"= 40'
0 20 40 80 120 160

700 & 800 BRADLEY HILL ROAD
SECTION 65.18, BLOCK 1, LOTS 3 & 4
TOWN OF ORANGETOWN, ROCKLAND COUNTY, N.Y.

title: SOIL EROSION AND SEDIMENT CONTROL PLAN

job no. 10642
drawing no. SE-1

STATE OF NEW YORK · FRANZ W. LAKI · 096772 · LICENSED PROFESSIONAL ENGINEER

FRANZ W. LAKI, P.E.
PROFESSIONAL ENGINEER
N.Y. LIC. NO. 96772

SESI CONSULTING ENGINEERS
SOILS / FOUNDATIONS
SITE DESIGN
ENVIRONMENTAL
12A MAPLE AVE. PINE BROOK, N.J. 07058 PH: 973-808-9050

dwg by: RDM
chk by: FL
scale: AS NOTED
date: 8/31/2020

rev	date	description	by
2	01/05/21	REVISION TO SYMBOLS	
1	10/30/20	REV PER TOWNSHIP'S REVIEW LTRS DATED 10/21/20 AND 10/27/20	RDM

NYS Education Law
Unauthorized alterations or additions to this plan are a violation of section 7209 (2) of the New York State Education Law. Copies of this map not having the seal of the engineer shall not be valid.
© SESI CONSULTING ENGINEERS D.P.C. 2020
This drawing and all information contained here on is proprietary information of SESI CONSULTING ENGINEERS D.P.C. and may not be copied or reproduced, either in whole or in part, by any method, without written permission of SESI CONSULTING ENGINEERS D.P.C.

700 BRADLEY HILL ROAD COVERAGE SUMMARY

PERVIOUS TO REMAIN		IMPERVIOUS TO PERVIOUS		PERVIOUS TO IMPERVIOUS	
AREA NO.	AREA	AREA NO.	AREA	AREA NO.	AREA
1	3258	1	199	1	1351
2	4397	2	139	2	257
3	1006	3	684	3	332
4	1413	4	133	4	937
5	778	5	196	5	145
6	1175	6	631	6	213
7	8725	7	128	7	1291
8	31	8	95	8	550
9	233	9	228	9	425
10	141	10	269	10	566
		11	254		
		12	59		
		13	872		
		14	305		
		15	414		
		16	822		
		17	718		
		18	31		

SUMMARY	TOTAL (SF)	TOTAL (AC)
PERVIOUS TO IMPERVIOUS	6067	0.14
IMPERVIOUS TO PERVIOUS	6177	0.14
NET	-110	
REDUCTION IN IMPERVIOUS		

REFERENCE:

1. EXIST CONDITIONS & BOUNDARY FOR 700 BRADLEY HILL ROAD ARE TAKEN FROM DRAWING ENTITLED "BOUNDARY AND TOPOGRAPHIC SURVEY FOR SECTION 65.18, BLOCK 1, LOT 4, 700 BRADLEY HILL ROAD - 'BUILDING #3'," PREPARED BY CONTROL POINT ASSOCIATES, INC, DATED 8/3/2020
2. EXIST CONDITIONS & BOUNDARY FOR 700 BRADLEY HILL ROAD ARE TAKEN FROM DRAWING ENTITLED "BOUNDARY AND TOPOGRAPHIC SURVEY FOR SECTION 65.18, BLOCK 1, LOT 4, 700 BRADLEY HILL ROAD - 'BUILDING #3'," PREPARED BY CONTROL POINT ASSOCIATES, INC, DATED 8/3/2020

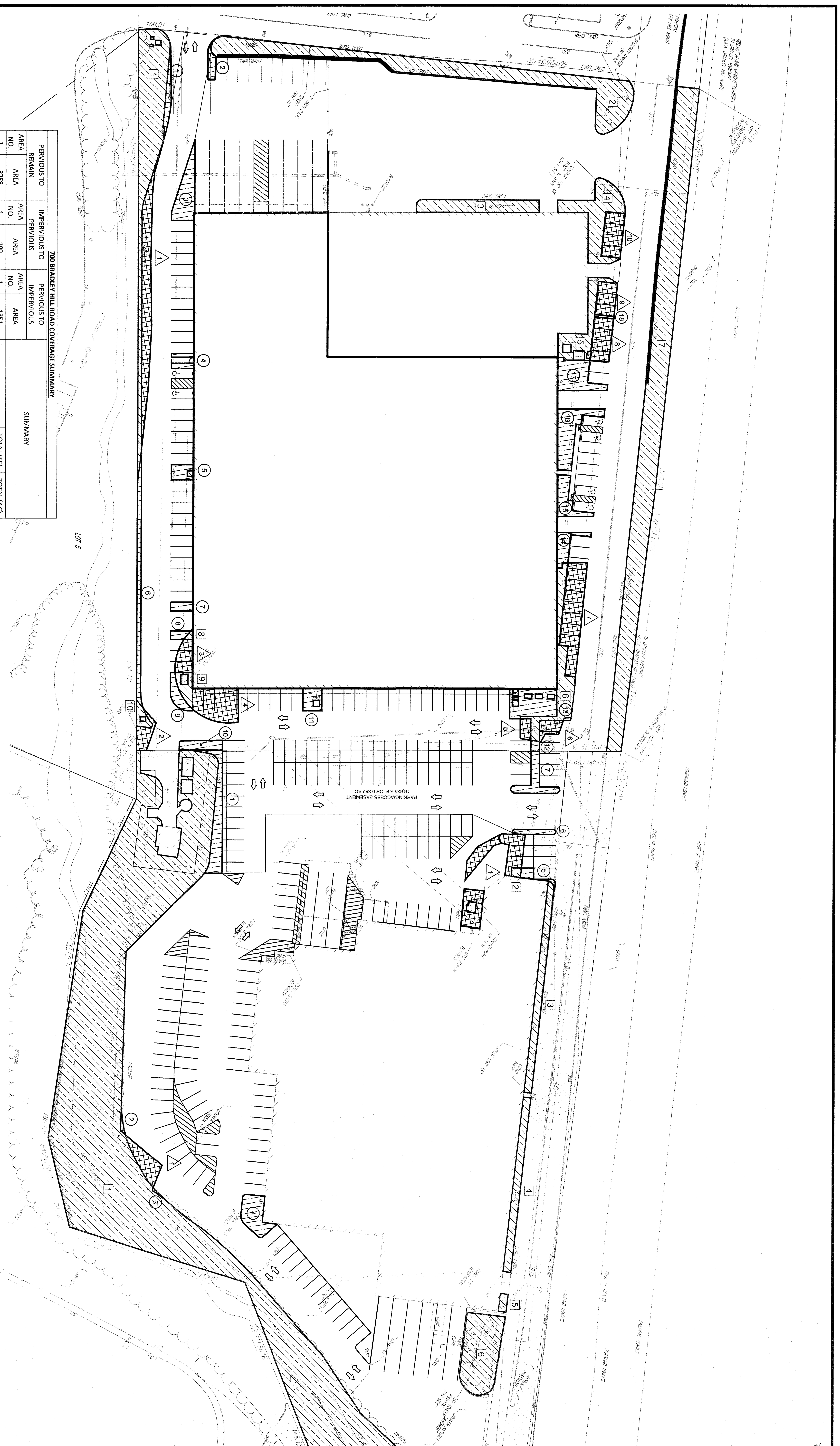

800 BRADLEY HILL ROAD COVERAGE SUMMARY

PERVIOUS TO REMAIN		IMPERVIOUS TO PERVIOUS		PERVIOUS TO IMPERVIOUS	
AREA NO.	AREA	AREA NO.	AREA	AREA NO.	AREA
1	35895	1	742	1	1164
2	55	2	31	2	426
3	1015	3	12		
4	894	4	576		
5	91	5	116		
6	1860	6	134		
		7	418		

SUMMARY	TOTAL (SF)	TOTAL (AC)
PERVIOUS TO IMPERVIOUS	1590	0.04
IMPERVIOUS TO PERVIOUS	2029	0.05
NET	-439	
REDUCTION IN IMPERVIOUS		

LEGEND

- (9) IMPERVIOUS TO PERVIOUS
- △2 PERVIOUS TO IMPERVIOUS
- [10] PERVIOUS TO REMAIN

Scale: 1"= 40'
0 20 40 80 120 160

700 & 800 BRADLEY HILL ROAD
SECTION 65.18, BLOCK 1, LOTS 3 & 4
TOWN OF ORANGETOWN, ROCKLAND COUNTY, N.Y.

title: IMPERVIOUS COVERAGE PLAN

job no. 10642
drawing no. IC-1
7 of 11

STATE OF NEW YORK · FRANZ W. LAKI · 096772 · LICENSED PROFESSIONAL ENGINEER

FRANZ W. LAKI, P.E.
PROFESSIONAL ENGINEER
N.Y. LIC. NO. 96772

SESI CONSULTING ENGINEERS
SOILS / FOUNDATIONS
SITE DESIGN
ENVIRONMENTAL
12A MAPLE AVE. PINE BROOK, N.J. 07058 PH: 973-808-9050

dwg by: RDM
chk by: FL
scale: AS NOTED
date: 10/30/2020

rev	date	description	by

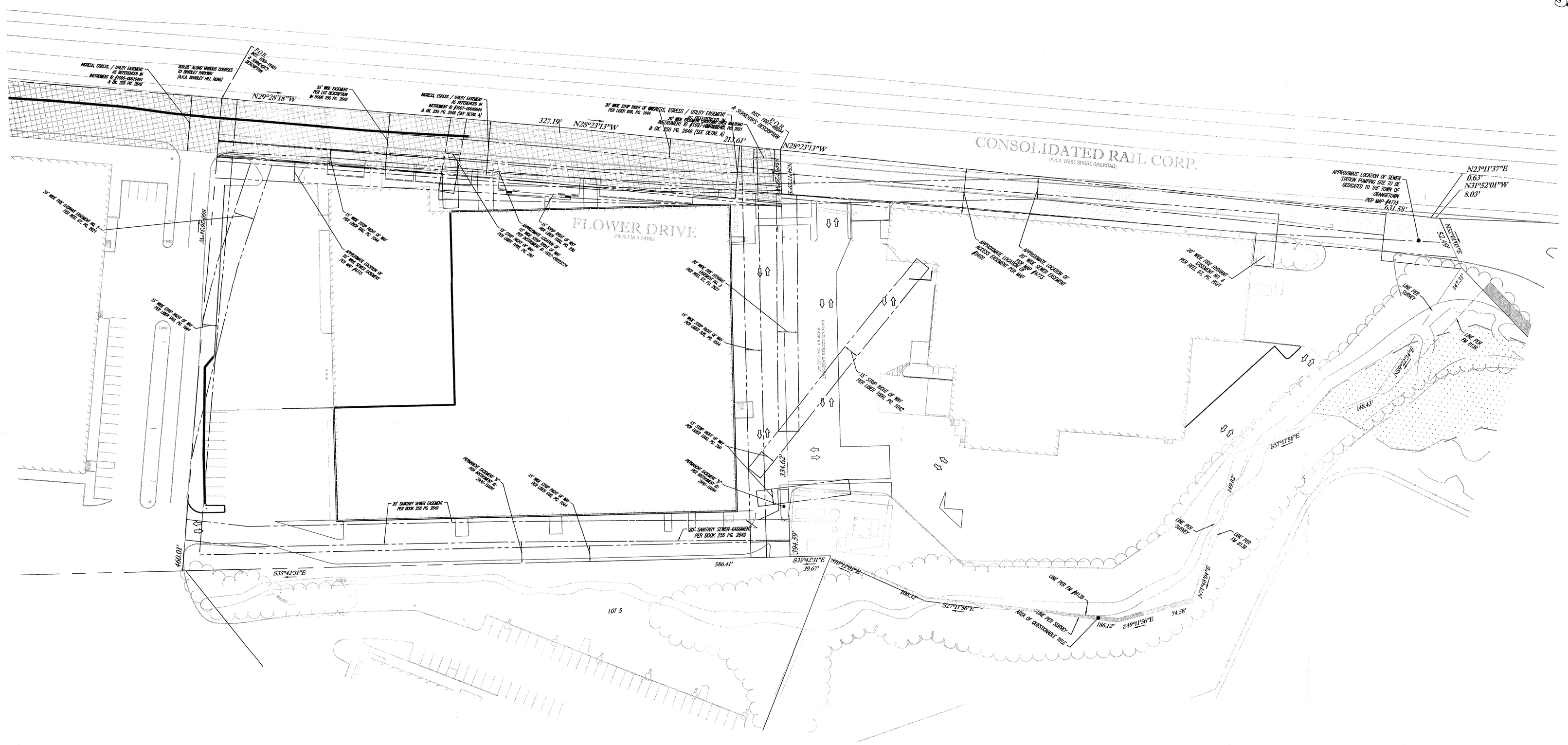

NOTE:

1. REFER TO "BOUNDARY AND TOPOGRAPHIC SURVEY FOR SECTION 65.18, BLOCK 1, LOT 4, 700 BRADLEY HILL ROAD - 'BUILDING #3'," PREPARED BY CONTROL POINT ASSOCIATES, INC, DATED 8/3/2020, AND "BOUNDARY AND TOPOGRAPHIC SURVEY FOR SECTION 65.18, BLOCK 1, LOT 3, 800 BRADLEY HILL ROAD - 'BUILDING #4'," PREPARED BY CONTROL POINT ASSOCIATES, INC, DATED 8/3/2020 FOR ADDITIONAL INFORMATION REGARDING EXISTING EASEMENTS.

REFERENCE:

1. EXIST CONDITIONS, BOUNDARY AND EASEMENT INFORMATION FOR 700 BRADLEY HILL ROAD ARE TAKEN FROM DRAWING ENTITLED "BOUNDARY AND TOPOGRAPHIC SURVEY FOR SECTION 65.18, BLOCK 1, LOT 4, 700 BRADLEY HILL ROAD - 'BUILDING #3'," PREPARED BY CONTROL POINT ASSOCIATES, INC, DATED 8/3/2020
2. EXIST CONDITIONS, BOUNDARY AND EASEMENT INFORMATION FOR 800 BRADLEY HILL ROAD ARE TAKEN FROM DRAWING ENTITLED "BOUNDARY AND TOPOGRAPHIC SURVEY FOR SECTION 65.18, BLOCK 1, LOT 3, 800 BRADLEY HILL ROAD - 'BUILDING #4'," PREPARED BY CONTROL POINT ASSOCIATES, INC, DATED 8/3/2020

Scale: 1"= 50'

0 25 50 100 150 200

NYS Education Law
Unauthorized alterations or additions to this plan are a violation of section 7209 (2) of the New York State Education Law. Copies of this map not having the seal of the engineer shall not be valid.

© SESI CONSULTING ENGINEERS D.P.C. 2020
This drawing and all information contained here on is proprietary information of SESI CONSULTING ENGINEERS D.P.C. and may not be copied or reproduced, either in whole or in part, by any method, without written permission of SESI CONSULTING ENGINEERS D.P.C.

N:\ACAD\10642\10642 700 BRADLEY EASEMENT.DWG 01/05/21 10:46:24AM ssis LAYOUT:E-1

rev	date	description	by

dwg by: RDM
chk by: FL
scale: AS NOTED
date: 10/30/2020

SESI CONSULTING ENGINEERS
SOILS / FOUNDATIONS
SITE DESIGN
ENVIRONMENTAL
72A MAPLE AVE. PINE BROOK, N.J. 07058 PH: 973-808-9050

STATE OF NEW YORK · FRANZ W. LAKI · 086772 · LICENSED PROFESSIONAL ENGINEER

FRANZ W. LAKI, P.E.
PROFESSIONAL ENGINEER
N.Y. LIC. NO. 86772

700 & 800 BRADLEY HILL ROAD
SECTION 65.18, BLOCK 1, LOTS 3 & 4
TOWN OF ORANGETOWN, ROCKLAND COUNTY, N.Y.

title: SITE EASEMENT PLAN

job no. 10642
drawing no.
E-1

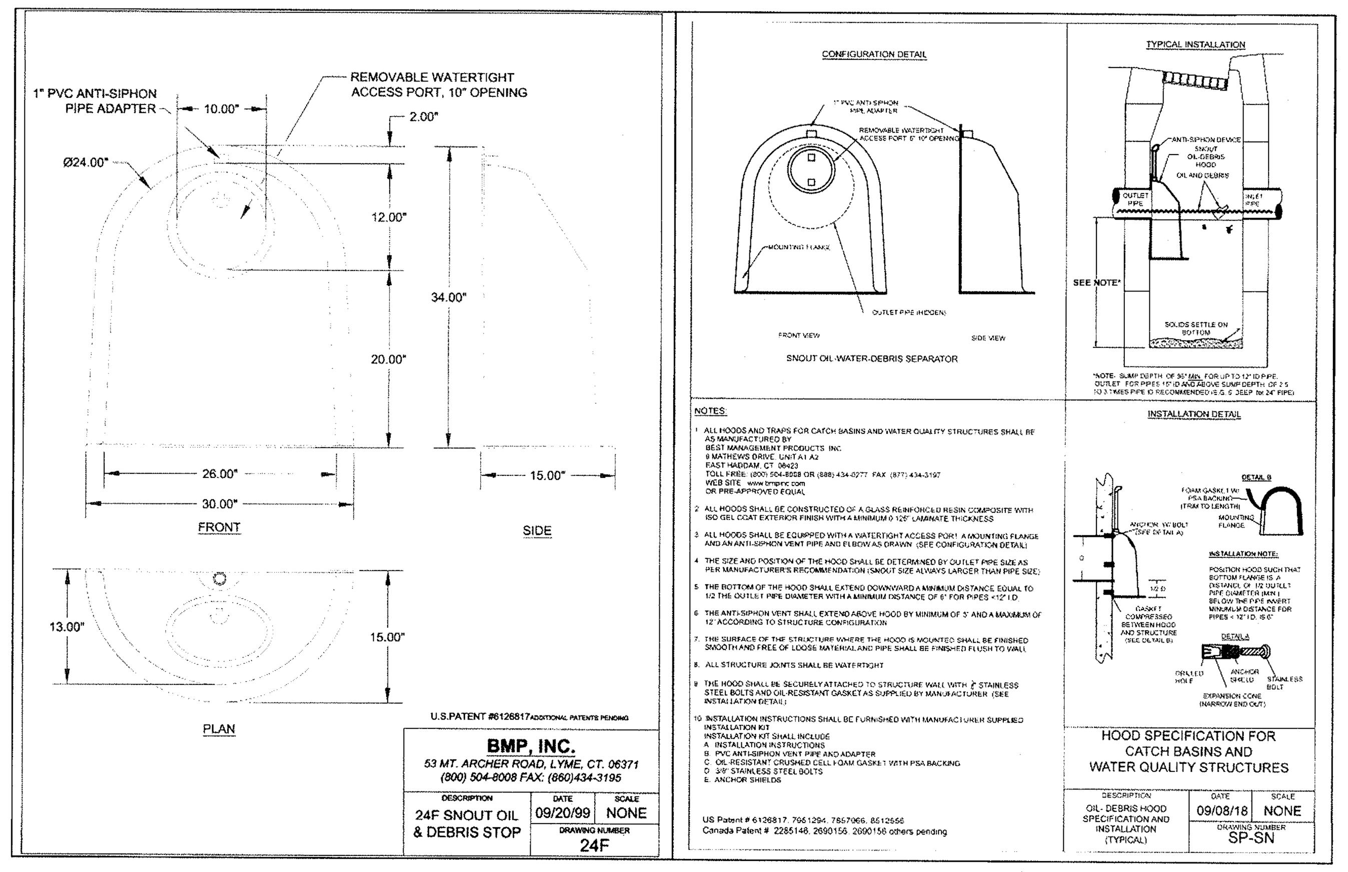

CONSTRUCTION SPECIFICATIONS

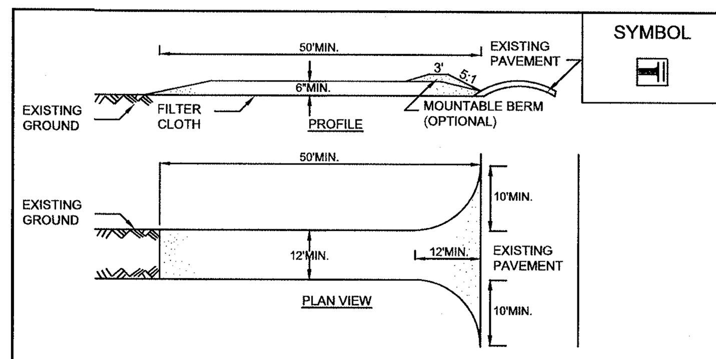

1. STONE SIZE - USE 1-4 INCH STONE, OR RECLAIMED OR RECYCLED CONCRETE EQUIVALENT.
2. LENGTH - NOT LESS THAN 50 FEET (EXCEPT ON A SINGLE RESIDENCE LOT WHERE A 30 FOOT MINIMUM LENGTH WOULD APPLY).
3. THICKNESS - NOT LESS THAN SIX (6) INCHES.
4. WIDTH - TWELVE (12) FOOT MINIMUM, BUT NOT LESS THAN THE FULL WIDTH AT POINTS WHERE INGRESS OR EGRESS OCCURS. TWENTY-FOUR (24) FOOT IF SINGLE ENTRANCE TO SITE.
5. GEOTEXTILE - WILL BE PLACED OVER THE ENTIRE AREA PRIOR TO PLACING OF STONE.
6. SURFACE WATER - ALL SURFACE WATER FLOWING OR DIVERTED TOWARD CONSTRUCTION ACCESS SHALL BE PIPED BENEATH THE ENTRANCE. IF PIPING IS IMPRACTICAL, A MOUNTABLE BERM WITH 5:1 SLOPES WILL BE PERMITTED.
7. MAINTENANCE - THE ENTRANCE SHALL BE MAINTAINED IN A CONDITION WHICH WILL PREVENT TRACKING OR FLOWING OF SEDIMENT ONTO PUBLIC RIGHTS-OF-WAY. ALL SEDIMENT SPILLED, DROPPED, WASHED OR TRACKED ONTO PUBLIC RIGHTS-OF-WAY MUST BE REMOVED IMMEDIATELY.
8. WHEN WASHING IS REQUIRED, IT SHALL BE DONE ON A AREA STABILIZED WITH STONE AND WHICH DRAINS INTO AN APPROVED SEDIMENT TRAPPING DEVICE.
9. PERIODIC INSPECTION AND NEEDED MAINTENANCE SHALL BE PROVIDED AFTER EACH RAIN.

ADAPTED FROM DETAILS PROVIDED BY: USDA - NRCS, NEW YORK STATE DEPARTMENT OF TRANSPORTATION, NEW YORK STATE DEPARTMENT OF ENVIRONMENTAL CONSERVATION, NEW YORK STATE SOIL & WATER CONSERVATION COMMITTEE

STABILIZED CONSTRUCTION ACCESS

CONSTRUCTION SPECIFICATIONS

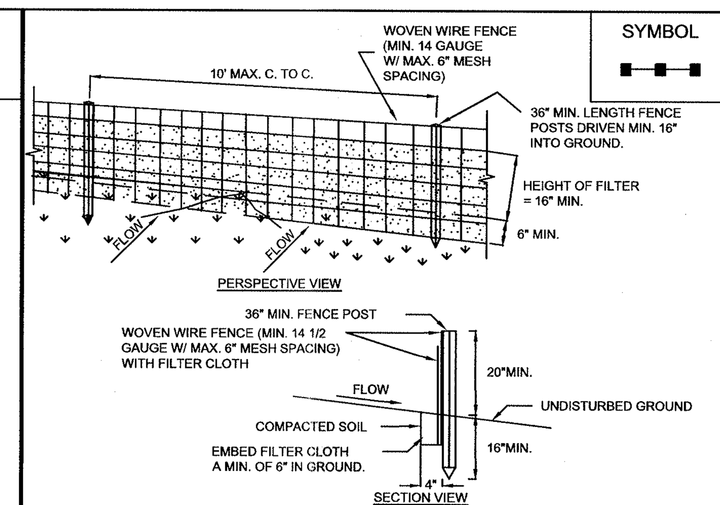

1. WOVEN WIRE FENCE TO BE FASTENED SECURELY TO FENCE POSTS WITH WIRE TIES OR STAPLES. POSTS SHALL BE STEEL EITHER "T" OR "U" TYPE OR HARDWOOD.
2. FILTER CLOTH TO BE TO BE FASTENED SECURELY TO WOVEN WIRE FENCE WITH TIES SPACED EVERY 24" AT TOP AND MID SECTION. FENCE SHALL BE WOVEN WIRE, 6" MAXIMUM MESH OPENING.
3. WHEN TWO SECTIONS OF FILTER CLOTH ADJOIN EACH OTHER THEY SHALL BE OVER-LAPPED BY SIX INCHES AND FOLDED. FILTER CLOTH SHALL BE EITHER FILTER X, MIRAFI 100X, STABILINKA T140N, OR APPROVED EQUIVALENT.
4. PREFABRICATED UNITS SHALL BE GEOFAB, ENVIROFENCE, OR APPROVED EQUIVALENT.
5. MAINTENANCE SHALL BE PERFORMED AS NEEDED AND MATERIAL REMOVED WHEN "BULGES" DEVELOP IN THE SILT FENCE.

ADAPTED FROM DETAILS PROVIDED BY: USDA - NRCS, NEW YORK STATE DEPARTMENT OF TRANSPORTATION, NEW YORK STATE DEPARTMENT OF ENVIRONMENTAL CONSERVATION, NEW YORK STATE SOIL & WATER CONSERVATION COMMITTEE

SILT FENCE

CONSTRUCTION SPECIFICATIONS

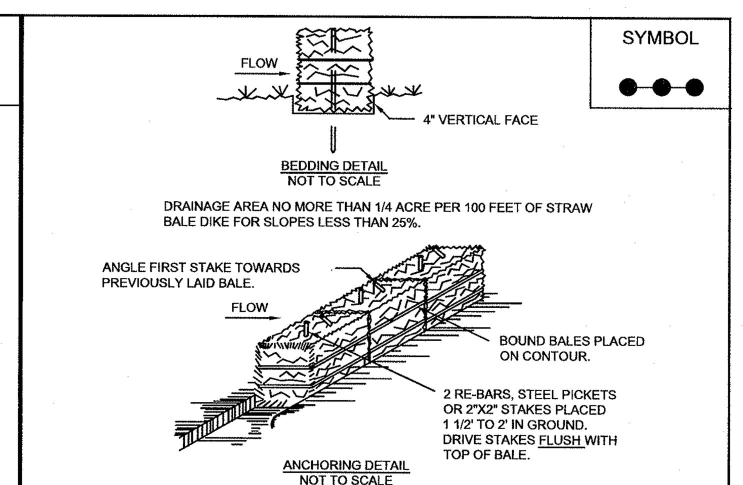

1. BALES SHALL BE PLACED AT THE TOE OF A SLOPE OR ON THE CONTOUR AND IN A ROW WITH ENDS TIGHTLY ABUTTING THE ADJACENT BALES.
2. EACH BALE SHALL BE EMBEDDED IN THE SOIL A MINIMUM OF (4) INCHES, AND PLACED SO THE BINDINGS ARE HORIZONTAL.
3. BALES SHALL BE SECURELY ANCHORED IN PLACE BY EITHER TWO STAKES OR RE-BARS DRIVEN THROUGH THE BALE. THE FIRST STAKE IN EACH BALE SHALL BE DRIVEN TOWARD THE PREVIOUSLY LAID BALE AT AN ANGLE TO FORCE THE BALES TOGETHER. STAKES SHALL BE DRIVEN FLUSH WITH THE BALE.
4. INSPECTION SHALL BE FREQUENT AND REPAIR REPLACEMENT SHALL BE MADE PROMPTLY AS NEEDED.
5. BALES SHALL BE REMOVED WHEN THEY HAVE SERVED THEIR USEFULLNESS SO AS NOT TO BLOCK OR IMPEDE STORM FLOW OR DRAINAGE.

ADAPTED FROM DETAILS PROVIDED BY: USDA - NRCS, NEW YORK STATE DEPARTMENT OF TRANSPORTATION, NEW YORK STATE DEPARTMENT OF ENVIRONMENTAL CONSERVATION, NEW YORK STATE SOIL & WATER CONSERVATION COMMITTEE

STRAW BALE DIKE

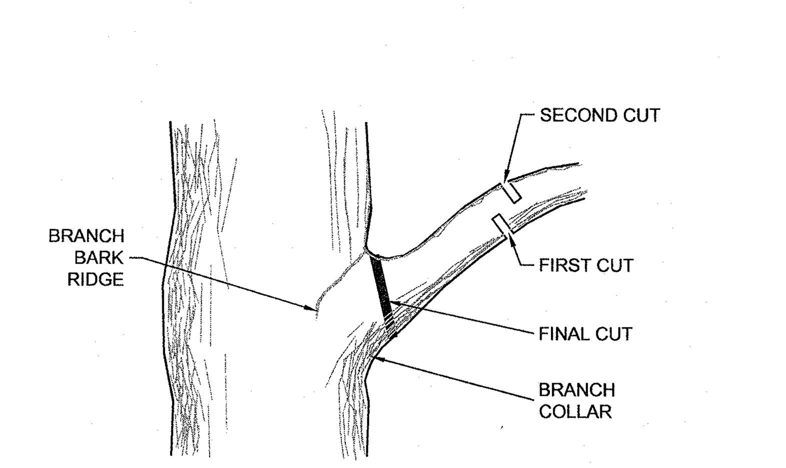

TREE LIMB REMOVAL DETAIL

NTS

NOTES:
1. CARE FOR SERIOUS INJURY SHOULD BE PRESCRIBED BY A PROFESSIONAL OR A LICENSED TREE EXPERT.
2. TREE LIMB REMOVAL, WHERE NECESSARY, WILL BE DONE FLUSH TO THE TRUNK OR MAIN BRANCH.

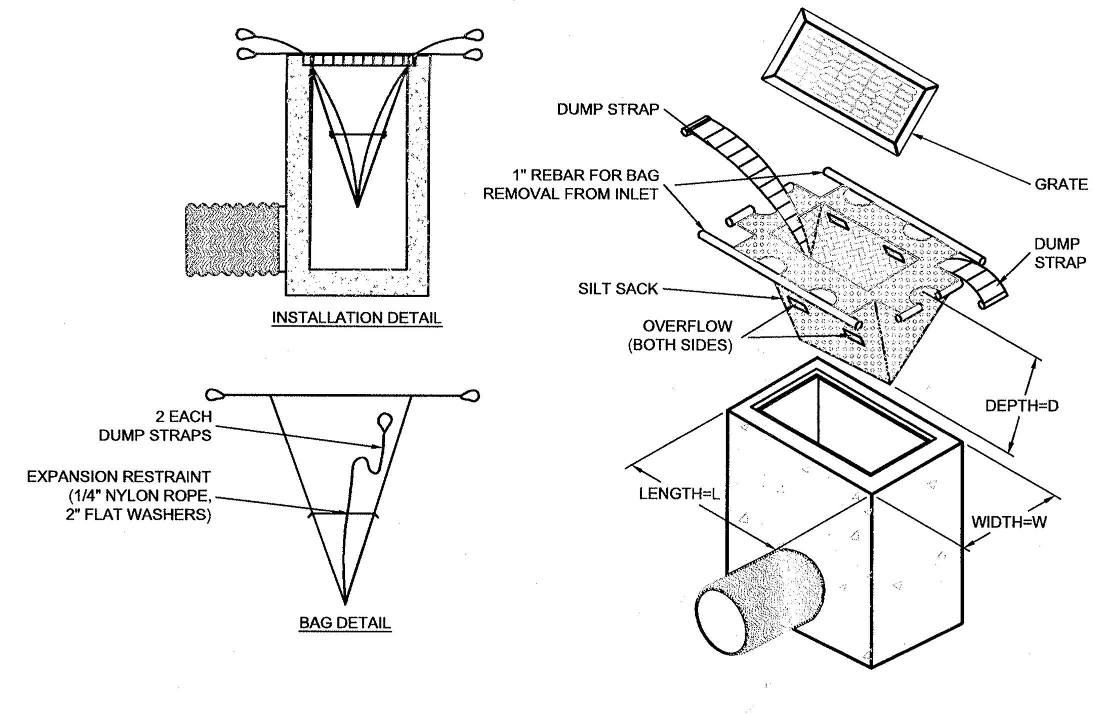

INTERNAL INLET SEDIMENT CONTROL DEVICE

NTS

NOTES:
1. STORMWATER INLETS, WHICH DO NOT DISCHARGE TO SEDIMENT TRAPS OR BASINS, MUST BE PROTECTED FOR THE DURATION OF CONSTRUCTION.

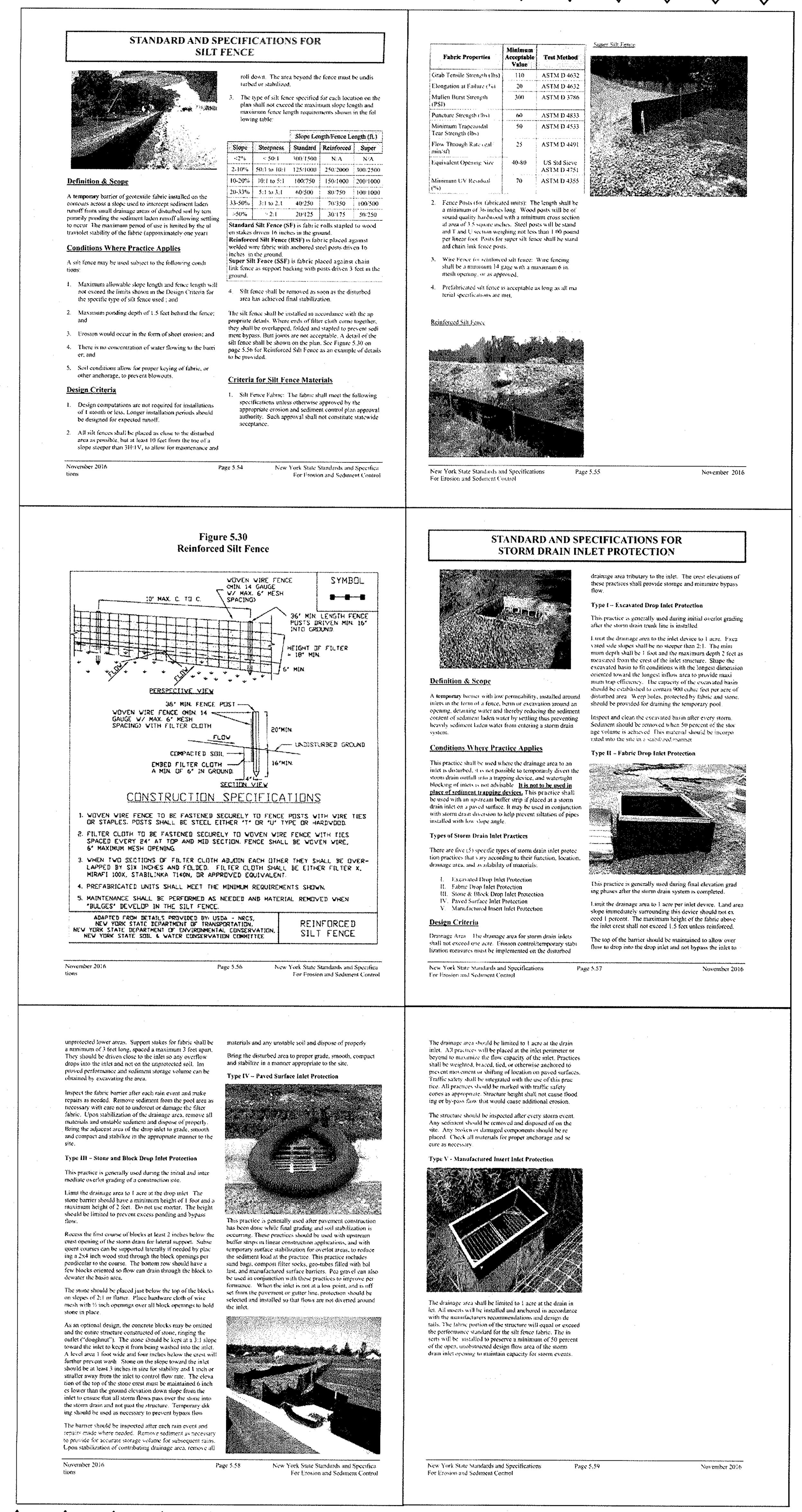

STANDARD AND SPECIFICATIONS FOR SILT FENCE

Slope	Steepness	Standard	Reinforced	Super
<2%	< 50:1	300/1500	N/A	N/A
2-10%	50:1 to 10:1	125/1000	250/2000	300/2500
10-20%	10:1 to 5:1	100/750	150/1000	200/1000
20-33%	5:1 to 3:1	60/500	80/750	100/1000
33-50%	3:1 to 2:1	40/250	70/350	100/500
>50%	> 2:1	20/125	30/175	50/250

Figure 5.30 Reinforced Silt Fence

STANDARD AND SPECIFICATIONS FOR STORM DRAIN INLET PROTECTION

Type IV – Paved Surface Inlet Protection

Type V – Manufactured Insert Inlet Protection

New York State Standards and Specifications For Erosion and Sediment Control — November 2016

2

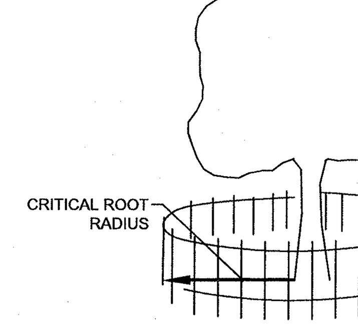

FENCING DETAIL - TREE PROTECTION

(AROUND REMAINING TREES) NTS

NOTES:
- CONSTRUCTION FENCE OR OTHER PROTECTIVE BARRIER SHALL BE INSTALLED OUTSIDE OF THE CRITICAL ROOT RADIUS.
- BOARDS SHALL NOT BE NAILED TO TREES.
- ROOTS SHALL NOT BE CUT OR DAMAGED WITHIN THE CRITICAL ROOT RADIUS.
- TREE LIMB REMOVAL, WHERE NECESSARY, SHALL BE DONE FLUSH TO THE TRUNK OR MAIN BRANCH.

CALCULATING THE CRITICAL ROOT RADIUS (CRR):
1. MEASURE THE DBH (DIAMETER OF TREE AT BREAST HEIGHT, 4.5 FEET ABOVE GROUND ON THE UPHILL SIDE OF TREE) IN INCHES.
2. MULTIPLY MEASURED DBH BY 1.5 OR 1.0. EXPRESS THE RESULT IN FEET.
2.1. **DBH X 1.5**: CRITICAL ROOT RADIUS FOR OLDER, UNHEALTHY, OR SENSITIVE SPECIES.
2.2. **DBH X 1.0**: CRITICAL ROOT RADIUS FOR YOUNGER, HEALTHY, OR TOLERANT SPECIES.
EXAMPLE: 6" DBH X 1.5 = 9" CONVERTS TO **9' CRITICAL ROUTE RADIUS**

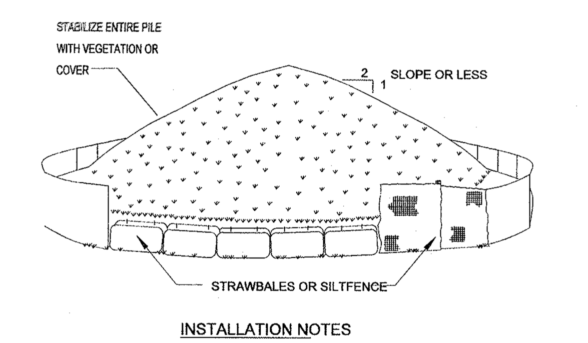

INSTALLATION NOTES

1. AREA CHOSEN FOR STOCKPILING OPERATIONS SHALL BE DRY AND STABLE.
2. MAXIMUM SLOPE OF STOCKPILE SHALL BE 1:2.
3. UPON COMPLETION OF SOIL STOCKPILING, EACH PILE SHALL BE SURROUNDED WITH EITHER SILT FENCING OR STRAWBALES, THEN STABILIZED AS NOTED.
4. TEMPORARILY STABILIZE AS NOTED IN SPECIFICATIONS
5. STOCKPILE SHALL RECEIVE A VEGETATIVE OR IMPERVIOUS COVER IN ACCORDANCE WITH MINIMUM STABILIZATION REQUIREMENTS

TEMP SOIL STOCKPILE

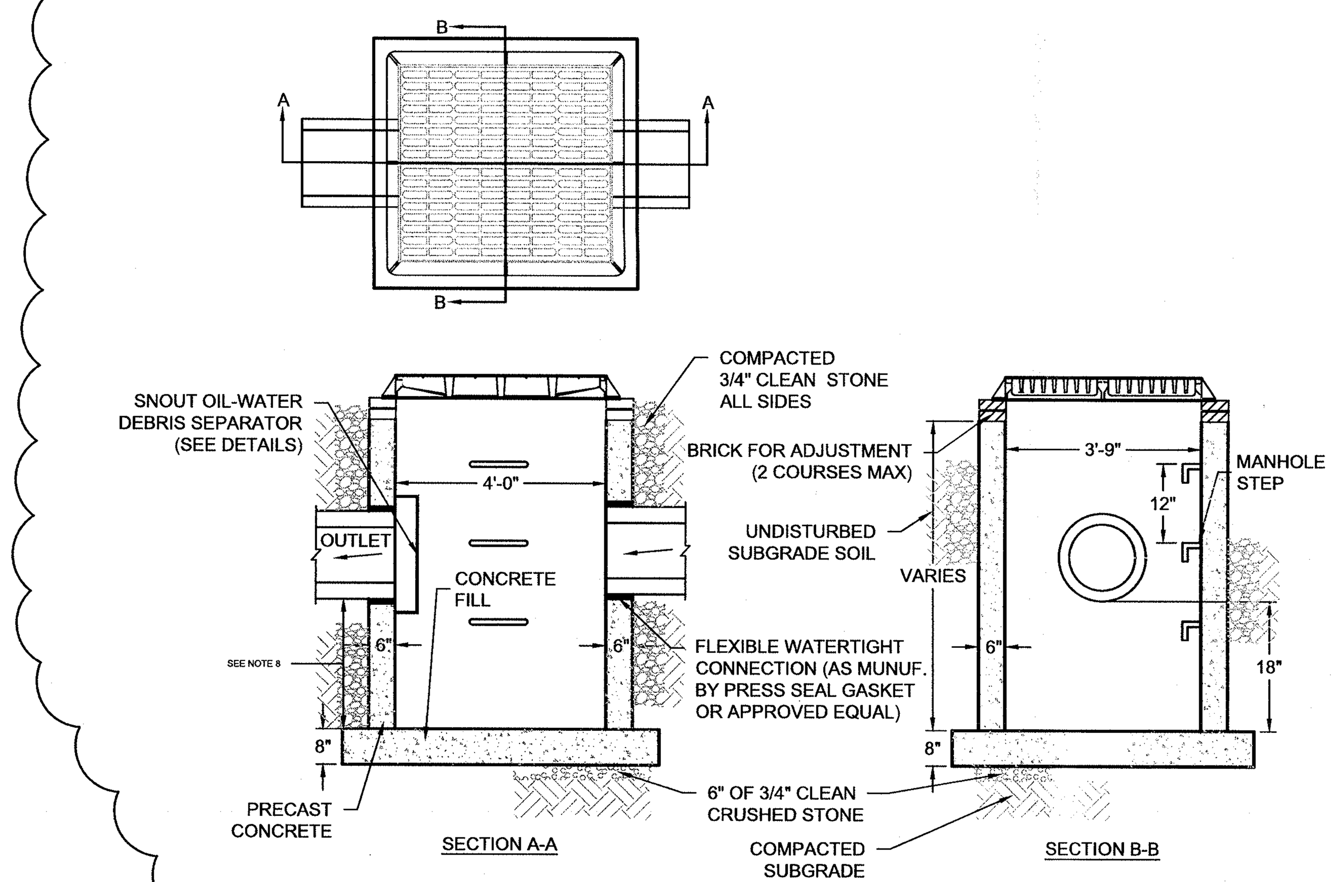

INLET WITH SUMP DETAIL

NTS

NOTES:
1. FOOTING TO BE 3500 PSI CONCRETE.
2. INVERT TO BE 3000 PSI CONCRETE.
3. IF WALL CONSTRUCTION IS OTHER THAN CONCRETE, THE WALLS SHALL BE PLASTERED BOTH INSIDE AND OUTSIDE WITH 1/2" THICK CEMENT PLASTER WITH BITUMINOUS COATING.
4. FRAME AND GRATE SHALL BE PATTERN NO. 3425 AS MANUFACTURED BY CAMPBELL FOUNDRY CO., OR APPROVED EQUAL. (GRATES TO BE BICYCLE TYPE.)
5. PROVIDE MANHOLE STEPS, PATTERN NO. 2593-2254 AS MANUFACTURED BY CAMPBELL FOUNDRY CO., OR APPROVED EQUAL.
6. PROVIDE 0.10' DROP IN ELEVATION BETWEEN INFLOW AND OUTFLOW PIPES UNLESS OTHERWISE SHOWN.
7. IF INLET IS 0'-8' DEEP THEN CONCRETE BLOCK SHALL BE SINGLE WALL (6") CONSTRUCTION. IF INLET IS 8'-12' DEEP THEN CONCRETE BLOCK SHALL BE DOUBLE WALL CONSTRUCTION.
8. *SUMP DEPTH OF 2.5 TO 3 TIMES THE PIPE I.D.*

NYS Education Law
Unauthorized alterations or additions to this plan are a violation of section 7209 (2) of the New York State Education Law. Copies of this map not having the seal of the engineer shall not be valid.
© SESI CONSULTING ENGINEERS D.P.C. 2021
This drawing and all information contained here on is proprietary information of SESI CONSULTING ENGINEERS D.P.C. and may not be copied or reproduced, either in whole or in part, by any method, without written permission of SESI CONSULTING ENGINEERS D.P.C.

SOIL EROSION AND SEDIMENT CONTROL NOTES

1) DESCRIPTION OF WORK
PROVIDE ALL MEANS NECESSARY TO INSTALL, INSPECT AND MAINTAIN, AND REMOVE TEMPORARY EROSION AND SEDIMENT CONTROL MEASURES AS SHOWN ON THE DRAWINGS AND AS REQUIRED TO MINIMIZE THE EROSION AND UNSPECIFIED TRANSPORT OF SOIL FROM THE SITE.
2) QUALITY ASSURANCE
A) GENERAL
I. INSTALL AND MAINTAIN IN COMPLIANCE WITH THE NEW YORK STATE DEPARTMENT OF ENVIRONMENTAL CONSERVATION GENERAL PERMIT FOR STORM WATER DISCHARGES FROM CONSTRUCTION ACTIVITIES.
1) RETAIN A COPY OF THE PROJECT'S NOTICE ON INTENT (NOI); A BRIEF DESCRIPTION OF THE PROJECT, POSTED IN A PROMINENT PLACE FOR PUBLIC VIEWING; AND A COPY OF THE PROJECT'S STORM WATER POLLUTION PREVENTION PLAN (SWPPP) AT THE CONSTRUCTION SITE FROM THE DATE OF INITIATION OF CONSTRUCTION ACTIVITIES TO THE DATE OF THE NOTICE OF TERMINATION (NOT) SUBMISSION.
II. INSTALL IN ACCORDANCE WITH THE DRAWINGS OR NEW YORK STANDARDS AND SPECIFICATIONS FOR SOIL EROSION & SEDIMENT CONTROL, AUGUST 2005 (N.Y. GUIDELINES) OR THE EROSION AND SEDIMENT CONTROL BEST MANAGEMENT PRACTICES MANUAL SERIES, WESTCHESTER COUNTY, NY, 1991 (W.C. GUIDELINES), WHICHEVER IS STRICTER.
III. GRADE AND MAINTAIN SITE AT ALL TIMES SUCH THAT ALL STORM WASTE RUNOFF FROM DISTURBED AREAS IS DIVERTED TO SOIL EROSION AND SEDIMENTATION CONTROL FACILITIES.
IV. NO CHANGES TO THE SOIL EROSION AND SEDIMENTATION CONTROL PLAN SHALL BE MADE WITHOUT APPROVAL OF THE OWNER'S REPRESENTATIVE.
V. NO MORE THAN 5 ACRES OF SOIL, NOT PROTECTED BY EROSION AND SEDIMENTATION CONTROL MEASURES, CAN BE DISTURBED AT ANY TIME.
VI. THE CONTRACTOR SHALL COMPLY WITH APPLICABLE FEDERAL, STATE, AND LOCAL REGULATIONS RELATING TO THE PREVENTION AND ABATEMENT OF POLLUTION.
B) PRODUCT DATA: SUBMIT MANUFACTURER'S CATALOGUE CUTS, SPECIFICATIONS AND INSTALLATION INSTRUCTIONS FOR SILT FENCES, FILTER FABRICS, EROSION CONTROL BLANKETS, TRASH RACKS, ANTI-SEEP COLLARS, AND SEDIMENT BASIN RISER AND BARREL PIPES.
3) WORK SCHEDULE
A) PRECONSTRUCTION PHASE:
I. INSTALL STABILIZED CONSTRUCTION ENTRANCE.
II. PRIOR TO CLEARING VEGETATION IN WATERSHED, INSTALL PERIMETER SILT FENCE/HAY BALES AND SILT FENCE.
III. PRIOR TO GRUBBING AND GRADING WITHIN A SPECIFIC WATER SHED INSTALL:
1) TEMPORARY SEDIMENT BASINS, AND
2) TEMPORARY EARTH DIKES/SWALES
B) CONSTRUCTION PHASE:
I. INSPECT AND MAINTAIN EROSION AND SEDIMENT CONTROL MEASURES UNTIL THEIR REMOVAL AS SPECIFIED. INSPECT MEASURES AT LEAST ONCE A WEEK AND WITHIN 24 HOURS OF THE END OF A 0.5 INCH OR GREATER STORM EVENT. STABILIZED AREAS WILL BE INSPECTED MONTHLY UNTIL THE ENTIRE SITE IS STABILIZED. MAINTENANCE WILL BE COMPLETED WITHIN 7 CALENDAR DAYS OF DETERMINING ITS NEED.
II. WHEN EXCESS SOIL FROM EARTHWORK ACTIVITIES OCCURS, CONSTRUCT AND STABILIZE SOIL STOCKPILES.
III. PROVIDE DUST CONTROL.
IV. KEEP PAVED ROADWAYS CLEAN AT ALL TIMES.
V. TEMPORARILY STABILIZE AS SPECIFIED.
VI. FOLLOWING FINISH GRADING, INSTALL TEMPORARY OR PERMANENT STABILIZATION.
VII. IMMEDIATELY FOLLOWING THE INSTALLATION OF CATCH BASIN INLETS INSTALL INLET PROTECTION.
C) POST CONSTRUCTION PHASE:
I. STABILIZE WATERSHED AND HAVE OWNER'S REPRESENTATIVE REVIEW AND APPROVE.
II. REMOVE TEMPORARY EARTH DIKES AND VEGETATE AND PERMANENTLY STABILIZE THE RELATED DISTURBED AREAS.
III. REMOVE SEDIMENT BASINS AND VEGETATE AND PERMANENTLY STABILIZE THE RELATED DISTURBED AREA.
IV. HAVE OWNER'S REPRESENTATIVE REVIEW AND APPROVE STABILIZATION OF AREAS NOTED ABOVE.
V. REMOVE PERIMETER SILT FENCE AND VEGETATE AND STABILIZE THE RELATED DISTURBED AREA.
VI. ALL STORM DRAINAGE OUTLETS WILL BE STABILIZED, AS REQUIRED, BEFORE THE DISCHARGE POINTS BECOME OPERATIONAL.
4) PRODUCTS AND EXECUTION
A) SEDIMENT BASINS: ALL PIPE CONNECTIONS AND ANTI-SEEP COLLAR CONNECTIONS SHALL BE WATERTIGHT EXCEPT FOR THE RISER TOP INLET OPENING AND DEWATERING HOLES. EMBANKMENT MATERIAL SHALL BE TAKEN FROM APPROVED AREAS AS DIRECTED BY OWNERS REPRESENTATIVE. IT SHALL BE CLEAN MINERAL SOIL FREE OF ROOTS, WOODY VEGETATION, OVERSIZED STONES, ROCKS, OR OTHER OBJECTIONABLE MATERIAL. RELATIVELY PERVIOUS MATERIAL SUCH AS SAND OR GRAVEL SHALL NOT BE PLACED IN THE EMBANKMENT. AREAS ON WHICH FILL IS TO BE PLACED SHALL BE SCARIFIED PRIOR TO PLACEMENT OF FILL. THE FILL MATERIAL SHALL CONTAIN SUFFICIENT MOISTURE SO THAT IT CAN BE FORMED BY HAND INTO A BALL WITHOUT CRUMBLING. IF WATER CAN BE SQUEEZED OUT OF THE BALL THE MATERIALS IS TOO WET FOR PROPER COMPACTION AND UNACCEPTABLE FOR USE IN THE EMBANKMENT. FILL MATERIAL SHALL BE PLACED IN SIX INCH TO EIGHT INCH THICK CONTINUOUS LAYERS OVER THE ENTIRE LENGTH OF THE FILL. COMPACTION SHALL BE OBTAINED BY ROUTING AND HAULING THE CONSTRUCTION EQUIPMENT OVER THE FILL SO THAT THE ENTIRE SURFACE OF EACH LAYER OF THE FILL IS TRAVERSED BY AT LEAST ONE WHEEL OR TREAD TRACK OF THE EQUIPMENT OR BY THE USE OF A COMPACTOR. THE EMBANKMENT SHALL BE CONSTRUCTED TO AN ELEVATION TEN PERCENT HIGHER THAN THE DESIGN HEIGHT TO ALLOW FOR SETTLEMENT.
B) INLET PROTECTION: THE FILTER FABRIC SHALL BE MIRAFI 700X OR EQUAL.
C) EARTH DIKES: COMPACT DIKES WITH EARTH MOVING EQUIPMENT. EROSION CONTROL BLANKETS SHALL BE BONTERRA CS2 OR EQUAL.
D) STABILIZED CONSTRUCTION ENTRANCE: THE FILTER FABRIC SHALL BE MIRAFI 600X OR EQUAL. THE CONTRACTOR SHALL KEEP THE ROADWAYS WITHIN THE PROJECT CLEAR OF SOIL AND DEBRIS AND IS RESPONSIBLE FOR ANY STREET CLEANING NECESSARY DURING THE COURSE OF THE PROJECT.
E) SILT FENCE: SILT FENCE FABRIC SHALL BE MIRAFI 100X OR EQUAL. WOOD POSTS SHALL BE OF SOUND QUALITY HARDWOOD, A MINIMUM 36 INCHES LONG AND TWO INCHES SQUARE. METAL POSTS SHALL BE STANDARD T AND U SECTION WEIGHING NOT LESS THAN ONE POUND PER LINEAR FOOT. WIRE FENCE BACKING SHALL BE A MINIMUM 14-1/2 GAGE WITH A MAXIMUM SIX INCH MESH OPENING AND SECURELY ATTACHED TO FENCE POSTS. POSTS SHALL EXTEND A MINIMUM OF 16 INCHES INTO THE GROUND.
F) HAY BALE BARRIERS: WOOD POSTS SHALL BE OF SOUND QUALITY HARDWOOD, A MINIMUM 36 INCHES LONG. METAL POSTS SHALL BE STANDARD T AND U SECTION WEIGHING NOT LESS THAN ONE POUND PER LINEAR FOOT.
G) TEMPORARY STABILIZATION:
I. ESTABLISHMENT OF TEMPORARY GRASS COVER: PREPARE SEED BED, SCARIFY IF COMPACTED, REMOVE DEBRIS AND OBSTACLES SUCH AS ROCKS AND STUMPS, AND SEED WITHIN 24 HOURS. AMEND SOIL, LIME SOIL TO Ph OF 6.0 AND FERTILIZE AT A RATE OF 14 LBS. PER 1,000 SQUARE FEET WITH A 5-10-10 OR EQUIVALENT FERTILIZER. WORK AMENDMENTS A MINIMUM OF 4 INCHES INTO SOIL. IF SEEDING IN OCTOBER/NOVEMBER SEED SHALL BE CERTIFIED AROOSTOOK WINTER RYE @ 100 LBS. PER ACRE. OTHERWISE SEED SHALL BE RYEGRASS (ANNUAL OR PERENNIAL) @ 30 LBS. PER ACRE.
II. MULCH: SMALL GRAIN STRAW MULCH SHALL BE APPLIED AT A RATE OF TWO TONS (100 TO 120 BALES) PER ACRE. SLOPES GREATER THAN 50% SHALL BE IMMEDIATELY MULCHED WITH EROSION CONTROL BLANKETS. BLANKETS SHALL BE BONTERRA S2 INSTALLED AS RECOMMENDED BY MANUFACTURER.
III. TREAT ALL DISTURBED AREAS WITHIN 500 FEET OF AN INHABITED DWELLING AS NECESSARY TO PROVIDE DUST CONTROL. CONFORM TO ALL LOCAL AND STATE REGULATIONS GOVERNING THESE ACTIVITIES.
IV. INSTALL TEMPORARY STABILIZATION WITHIN 24 HOURS AFTER THE END OF CONSTRUCTION ACTIVITIES IN AN AREA UNLESS THERE IS SNOW COVER OR CONSTRUCTION ACTIVITIES WILL RESUME WITHIN 21 DAYS.
H) CONSTRUCTION VEHICLES: THOROUGHLY WASH DOWN ALL CONSTRUCTION VEHICLES EACH TIME THEY LEAVE THE SITE, AND COVER WITH TARPAULINS AS NECESSARY TO PREVENT VEHICLE TRANSPORT OF SEDIMENT OFF-SITE. DIRECT WASTEWATER FROM WASH DOWN OPERATIONS TO A SEDIMENT BASIN.
5) THE VILLAGE MAY REQUIRE ADDITIONAL EROSION CONTROL MEASURES IF DEEMED APPROPRIATE TO MITIGATE UNFORESEEN SILTATION AND EROSION ON OF DISTURBED SOILS.

N:\ACAD\10642\DOC\10642SEC.DOC

STATE OF NEW YORK — FRANZ W. LAKI — 096772 — LICENSED PROFESSIONAL ENGINEER

FRANZ W. LAKI, P.E.
PROFESSIONAL ENGINEER
N.Y. LIC. NO. 96772

SESI CONSULTING ENGINEERS
SOILS / FOUNDATIONS
SITE DESIGN
ENVIRONMENTAL
12A MAPLE AVE. PINE BROOK, N.J. 07058 PH: 973-808-9050

dwg by: RDM
chk by: FL
scale: AS NOTED
date: 8/31/2020

rev	date	description	by
2	01/05/21	REVISED DETAILS	
1	10/30/20	REV PER TOWNSHIP'S REVIEW LTRS DATED 10/21/20 AND 10/27/20	RDM

700 & 800 BRADLEY HILL ROAD
SECTION 65.18, BLOCK 1, LOTS 3 & 4
TOWN OF ORANGETOWN, ROCKLAND COUNTY, N.Y.

title: DETAILS AND NOTES

job no. 10642
drawing no.
D-1

N:\ACAD\10642\10642 700 BRADLEY DETAILS.DWG 01/06/21 10:43:26AM, aas, LAYOUT: D-1

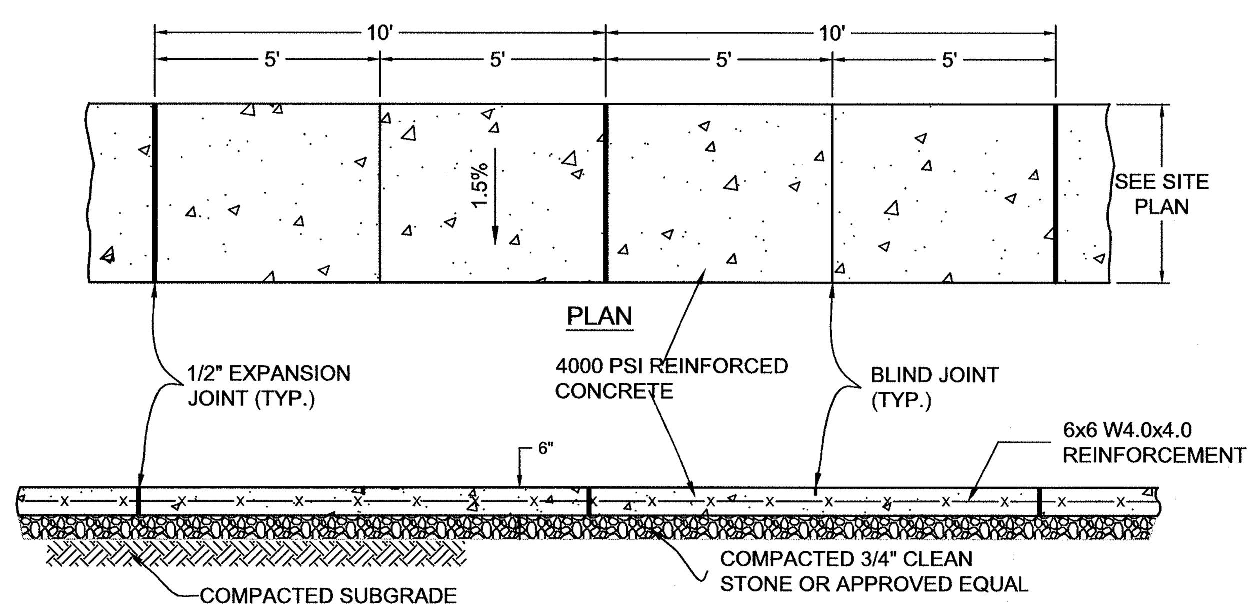

TYPICAL ON GRADE SIDEWALK DETAIL

NTS

NOTES:

1. SUBGRADE SHALL BE COMPACTED IN A MANNER SUITABLE TO THE TOWNSHIP/DESIGN ENGINEER. CONTRACTOR SHALL PROVIDE ANY ADDITIONAL FILL REQUIRED IN THE FORM OF 3/4" CLEAN STONE TO BRING SUBGRADE TO THE REQUIRED ELEVATION.
2. EXPANSION JOINTS SHALL BE 1/2" WIDE AND FILLED WITH PREFORMED BITUMINOUS IMPREGNATED FIBER JOINT FILLER. THE TOP OF ALL JOINT FILLER SHALL BE 1/4" BELOW THE SURFACE. EXPANSION JOINTS SHALL BE LOCATED 10' ON CENTER, ALTERNATING WITH BLIND JOINTS.
3. BLIND JOINTS ARE TO BE SURFACE GROOVES CUT INTO SIDEWALK 1/2" DEEP AND 1/8" WIDE, AND SHALL BE 10' ON CENTER ALTERNATING WITH EXPANSION JOINTS.
4. REINFORCEMENT FOR SIDEWALK SHALL BE SHEETS OF 6X6-W4.0XW4.0 PLACED 1 1/2" FROM SURFACE OF SLAB ON SUITABLE SUPPORTS.
5. CONCRETE SHALL HAVE A MIN. COMPRESSIVE STRENGTH OF 4000PSI AT 28 DAYS; IT SHALL BE PLACED AT 4 INCH ±1" SLUMP; IT SHALL BE PROPORTIONED AS FOLLOWS:
   * MIN. 658 LBS. CEMENT/CY TYPE I OR TYPE II.
   * 6% AIR ENTRAINMENT
   * MAX. WATER/CEMENT RATIO = 0.48
   * COURSE AGGREGATE: MIN. 1450 LBS. OF 1/2" CLEAN, CRUSHED, DURABLE STONE CONFORMING TO REQUIREMENTS OF ASTM C33.
6. CONCRETE SHALL NOT BE PLACED ON FROZEN SUBGRADE SOILS. CONCRETE SHALL BE PROTECTED AGAINST FREEZING AND LOSS OF MOISTURE FOR 7 DAYS FOLLOWING PLACEMENT.
7. CONTRACTOR SHALL PROVIDE A CROSS SLOPE OF 1/4" PER FOOT.
8. ALL EDGES SHALL BE ROUNDED AND GIVEN A STEEL TROWEL FINISH. ALL SURFACES SHALL BE GIVEN A BROOM FINISH PERPENDICULAR TO THE DIRECTION OF PEDESTRIAN TRAFFIC.
9. ALL EXPOSED SURFACES ARE TO BE COATED WITH A TRANSLUCENT CURING COMPOUND N.J.D.O.T. STD. SPEC. 8.5.29 IMMEDIATELY FOLLOWING FINAL FINISHING. COVERAGE SHALL NOT BE LESS THAN ONE GALLON PER 200 SQUARE FEET.
10. AT DRIVEWAY CROSSINGS, SIDEWALK SHALL BE 6" THICK. ALL OTHER AREAS SHALL BE 4" THICK.

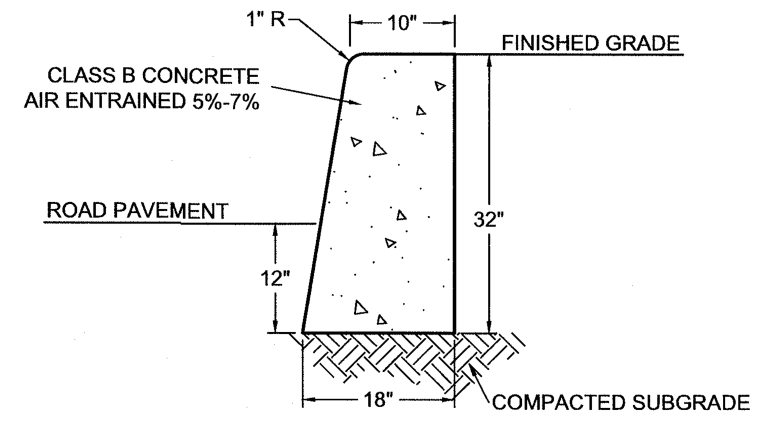

CONCRETE RETAINING CURB

NTS

NOTES:

1. ANY EXCAVATION BELOW DESIRED GRADE DUE TO OVER EXCAVATION OR WET SOIL CONDITIONS SHALL BE BACKFILLED WITH 3/4" CLEAN CRUSHED STONE. ALL SUBGRADES SHALL BE APPROVED BY THE TOWNSHIP ENGINEER PRIOR TO POURING.
2. EXPANSION JOINTS SHALL BE PROVIDED AT EQUAL DISTANCES OF NOT MORE THAN 20', AT THE START AND FINISH OF ALL CURVED SECTIONS, AND AT ALL STORM SEWER INLETS. JOINTS SHALL BE FILLED WITH PREFORMED EXPANSION JOINT FILLER, 1/2" THICK, CONFORMING TO NEW JERSEY DEPARTMENT OF TRANSPORTATION STANDARD SPECIFICATIONS FOR ROAD AND BRIDGE CONSTRUCTION. CONTRACTION JOINTS SHALL BE PROVIDED EVERY 10'. THE JOINT SHALL BE RECESSED 1/4" FROM THE TOP AND FRONT OF THE CONCRETE CURB.
3. CURB SHALL BE TEMPORARILY BACKFILLED TO FINISHED GRADE WITH SOIL BEHIND AND STONE ON THE ROAD AS SOON AS IT HAS ATTAINED SUFFICIENT SUPPORTING STRENGTH OR WITHIN 24 HOURS OF POURING (WHICHEVER IS LESS).
4. WHEN NEW CURB IS INSTALLED ALONG AN EXISTING PAVED AREA, THE EXISTING PAVEMENT SHALL BE CUT 2' IN FRONT OF THE NEW CURB FACE IN A STRAIGHT LINE AT A 45° ANGLE WITH A CUTTING WHEEL OR PNEUMATIC HAMMER. THE NEW PAVEMENT SHALL BE TACKED AND BUTTED TO THE EXISTING PAVEMENT, IN ACCORDANCE WITH PAVEMENT PATCH DETAIL.
5. CURB REPLACEMENT SHALL BE FROM EXPANSION JOINT TO EXPANSION JOINT ONLY.

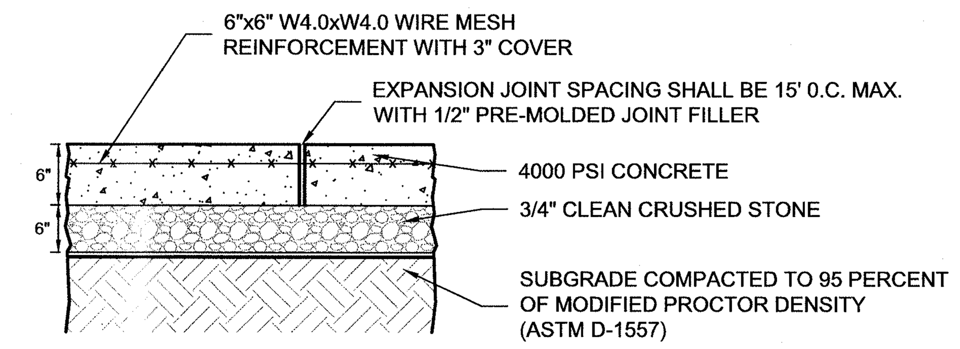

6" THICK REINFORCED CONCRETE PAD DETAIL

NTS

NOTES:

1. SUBGRADE IS TO BE COMPACTED AS SPECIFIED BY THE DESIGN ENGINEER.
2. THE CONCRETE SHALL HAVE A MINIMUM ULTIMATE COMPRESSIVE STRENGTH OF 4000 PSI @ 28 DAYS AND THE MIX DESIGN SHALL BE APPROVED BY THE DESIGN ENGINEER.
3. CONCRETE SHALL BE PROPORTIONED BY THE ADDITION OF 1 1/2 LBS/C.Y. OF POLYPROPYLENE FIBROUS CONCRETE REINFORCEMENT ("E3") AS MANUFACTURED BY FIBERMESH COMPANY. (ALTERNATE)
4. PLACEMENT AND FINISHING SHALL BE IN A CONTINOUS OPERATION.
5. THE CONCRETE SHALL BE FOGGED AND COVERED WITH POLYETHYLENE AND WET CURED, MAINTAINING MOISTURE CONTENT WHILE COVERED FOR AT LEAST 5 DAYS.
6. CONCRETE SHALL BE PROTECTED FROM BOTH FREEZING AND LOSS OF MOISTURE FOR A PERIOD OF 7 DAYS FROM TIME OF PLACEMENT.
7. CONCRETE SHALL NOT BE PLACED ON FROZEN SUBGRADE SOILS.
8. ALL EDGES SHALL BE ROUNDED AND GIVEN A STEEL TROWEL FINISH.
9. EXPANSION JOINTS ARE TO BE 1/2" WIDE AND FILLED WITH PREFORMED BITUMINOUS TYPE JOINT FILLER. THE TOP OF ALL JOINT FILLER SHALL BE BELOW THE TOP OF THE SURFACE. EXPANSION JOINTS SHALL BE LOCATED 15' (MAX.) ON CENTER.
10. 6" THICK - $\frac{3}{4}$" CLEAN STONE CRUSHED STONE BASE SHALL EXTEND 6" HORIZONTALLY BEYOND THE CONCRETE PAD IN ALL DIRECTIONS.
11. ALL CONCRETE SUBJECT TO EXTERIOR EXPOSURE SHALL BE AIR ENTRAINED 4% TO 6%.
12. COLD WEATHER CONCRETE SHALL BE DONE IN ACCORDANCE WITH ACI-306. HOT WEATHER CONCRETING SHALL BE DONE IN ACCORDANCE WITH ACI-305.

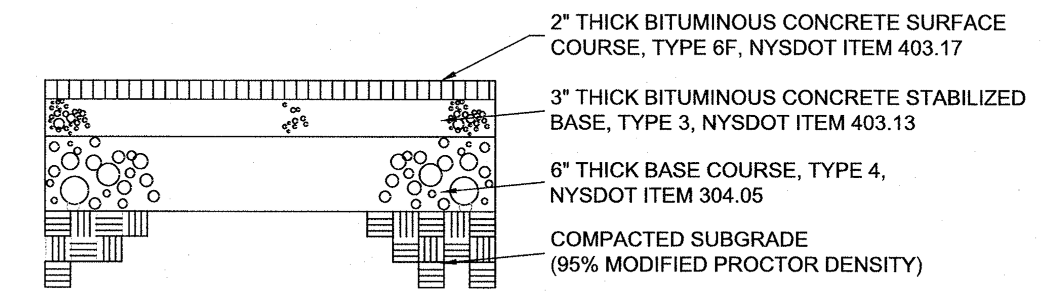

TYPICAL TRUCK PAVEMENT DETAIL - NY

NTS

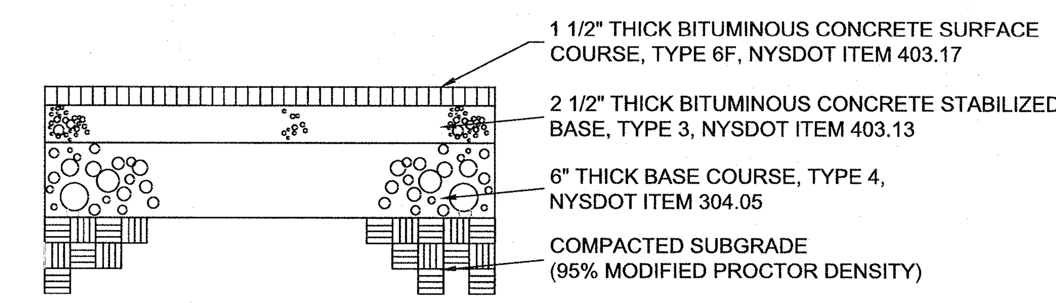

TYPICAL CAR PAVEMENT DETAIL - NY

NTS

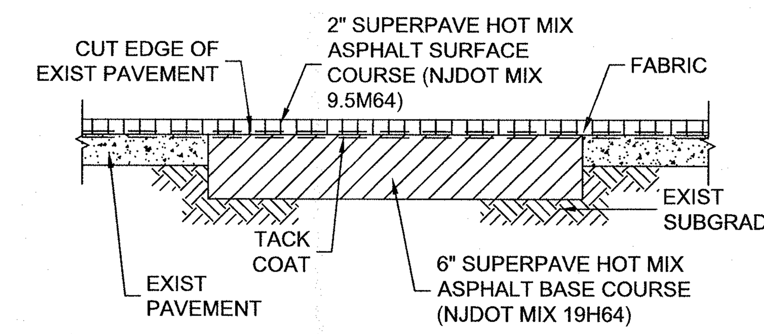

MILL, OVERLAY & PATCH DETAIL

NTS

NOTES:

1. EXISTING ASPHALT SHALL BE MILLED TO A DEPTH OF 2"
2. AREA TO RECEIVE OVERLAY SHALL BE CLEANED OF ANY SURFACE DIRT, WATER, GREASE, AND VEGETATION.
3. CRACKS 1/4" OR LESS SHALL BE FILLED WITH LIQUID ASPHALT UNTIL FLUSH W/ SURFACE.
4. CRACKS WIDER THAT 1/4" SHALL BE CLEANED FULL DEPTH OF EXIST. ASPHALT AND FILLED W/ SLURRY, HOT MIX, OR SUITABLE FILLER APPROVED BY ENGINEER.
5. HOLES AND LARGE CRACKS SHALL BE CUT OUT AND REPLACED W/ 6" SUPERPAVE HOT MIX ASPHALT BASE COURSE (NJDOT MIX 19H64)
6. APPLY ASPHALT CEMENT TACK COAT TO SURFACE OF EXIST. ASPHALT AT A RATE OF .27 TO .32 GAL./SQ.YD. AND AT A TEMP. OF APPROX. 300° FAHRENHEIT. SEALANT TEMP. SHOULD BE ADJUSTED TO PROVIDE MOST UNIFORM APPLICATION RATE.
7. TACK COAT SHALL BE APPLIED 2" TO 6" WIDER THAN WIDTH OF FABRIC BEING PLACED.
8. FABRIC SHALL BE LAID DOWN W/ MIN. WRINKLING AND IN NO CASE SHALL WRINKLES BE LARGE ENOUGH TO CAUSE LAPS.
9. JOINTS SHALL BE MADE BY OVERLAPPING FABRIC 1" TO 3". ASPHALT OVERLAY SHALL BE APPLIED AS SOON AS MEMBRANE HAS CURED AND AT A LAYDOWN TEMP. OF 275° TO 300° FAHRENHEIT.
10. FABRIC SPECIFIED IS "PETROMAT" AS MANUFACTURED BY PROPEX OR APPROVED EQUAL.
11. CONTRACTOR SHALL PROVIDE A SEPARATE UNIT PRICE FOR PATCH WORK AS DESCRIBED ABOVE.

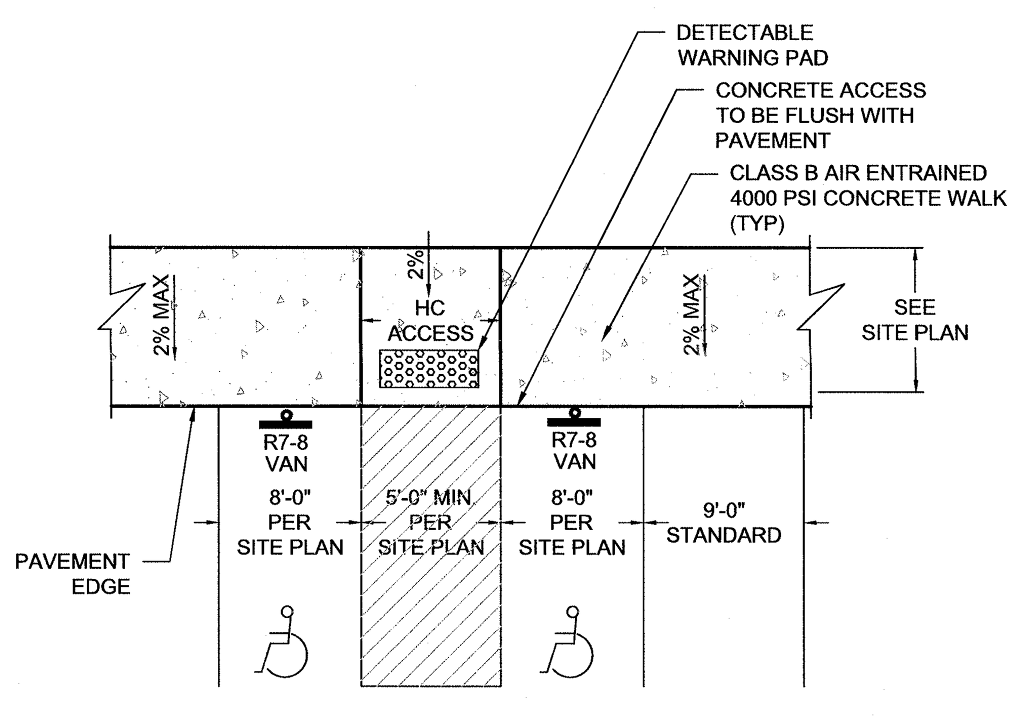

DETAIL AT HANDICAPPED ACCESS ADJACENT TO PARKING

NTS

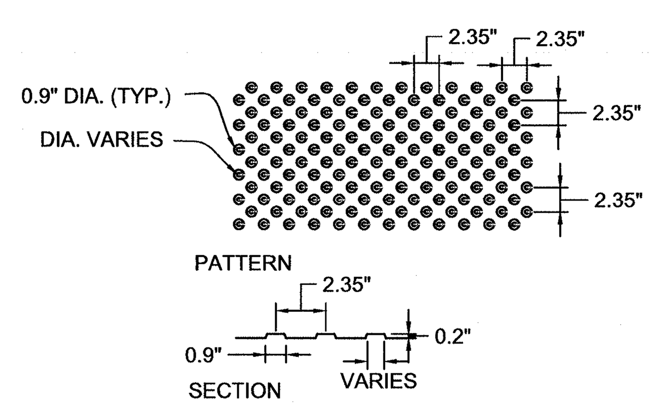

HANDICAPPED DETECTABLE WARNING PAD

NTS

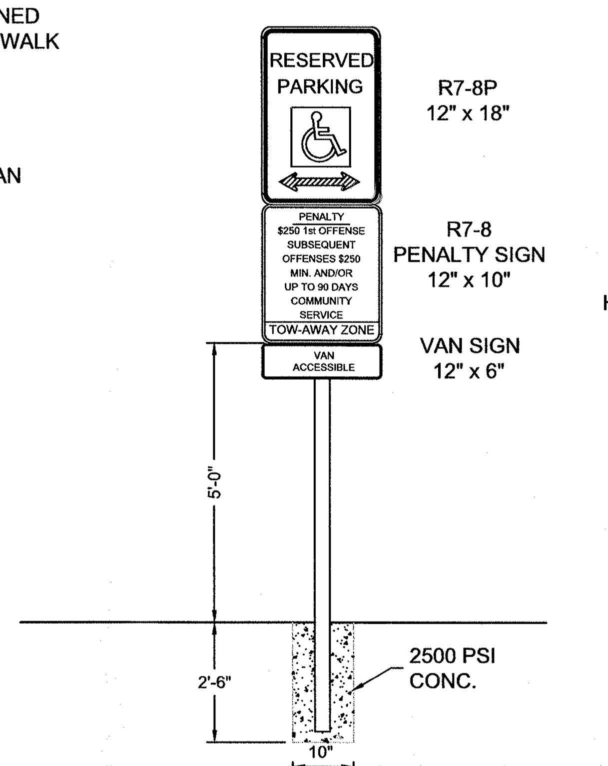

TYPICAL HANDICAP SIGN DETAIL

NTS

NOTES:

1. THE BOTTOM OF THE R7-8 SIGN SHALL BE MOUNTED APPROXIMATELY 60 INCHES ABOVE THE PARKING LOT OR SIDEWALK SURFACE WHEN THE SIGN IS PARALLEL TO THE SIDEWALK AND APPROXIMATELY 72 INCHES ABOVE THE PARKING LOT OR SIDEWALK SURFACE WHEN THE SIGN IS PERPENDICULAR TO THE SIDEWALK.
2. THE R7-8 SIGN SHALL BE CENTERED AND MOUNTED AT THE HEAD OF EACH PARKING SPACE.
3. THE SIGNS SHOULD HAVE A GREEN LEGEND AND BORDER ON A WHITE BACKGROUND. THE SIGN SHALL ALSO DISPLAY THE INTERNATIONAL SYMBOL OF ACCESSIBILITY (NORMALLY BLUE).
4. EACH ACCESSIBLE PARKING SPACE SHALL ALSO BE MARKED WITH A 12 INCH HIGH BY 10 INCH WIDE R7-8 PENALTY SIGN, WITH A BLACK LEGEND AND BORDER ON A WHITE BACKGROUND (DIMENSIONS AND COLORS AS PER NEW JERSEY DEPARTMENT OF TRANSPORTATION), BENEATH THE R7-8P SIGN.

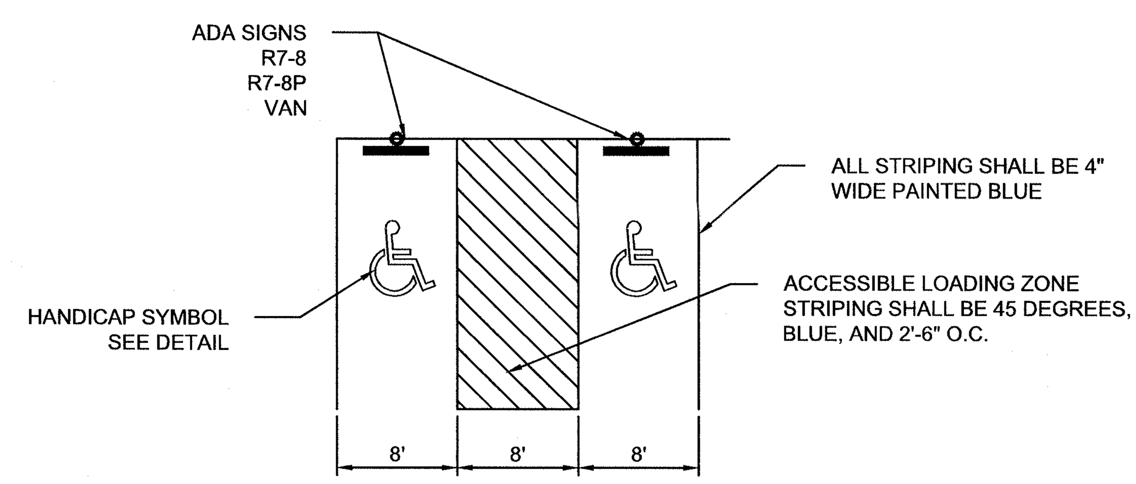

TYPICAL ADA VAN & CAR PARKING DETAIL

NTS

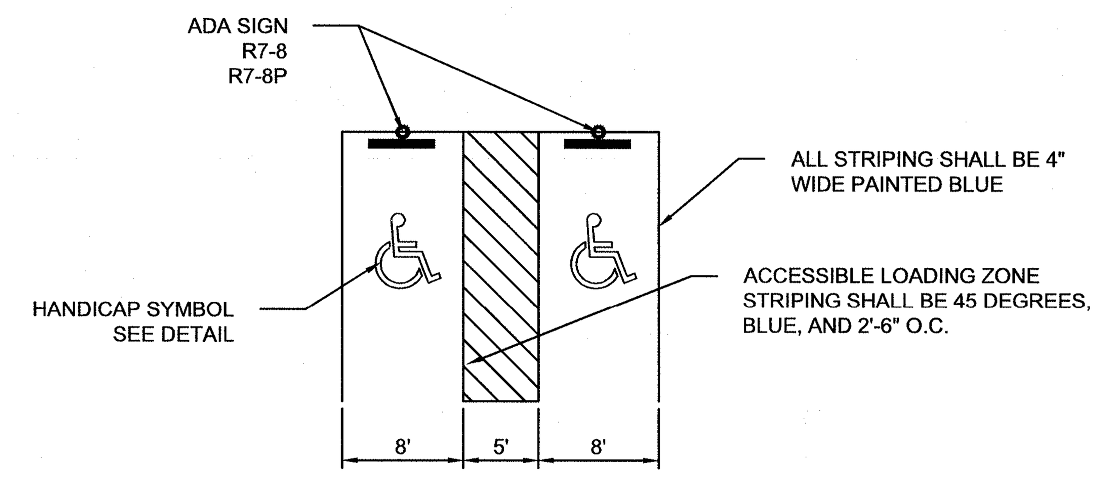

TYPICAL ADA CAR PARKING DETAIL

NTS

ADA PARKING NOTES:

- ALL STRIPING AND SYMBOLS SHALL BE BLUE AND 4" WIDE.
- FINISHED GRADES SLOPE SHALL NOT EXCEED 2% IN ANY DIRECTION.

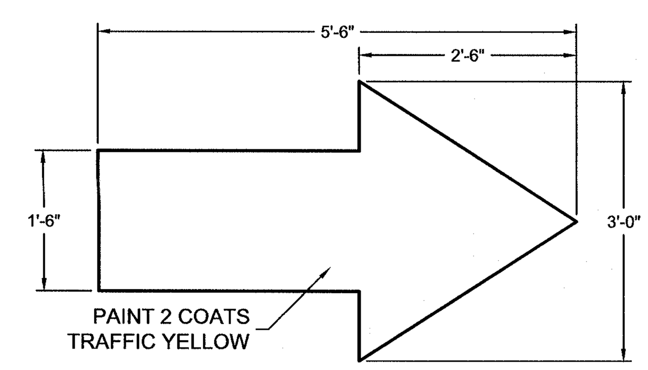

PAVEMENT DIRECTIONAL ARROW

NTS

NOTE:
PROVIDE YELLOW PAINTED DIRECTIONAL ARROW AT ALL LOCATIONS INDICATED ON SITE PLAN.

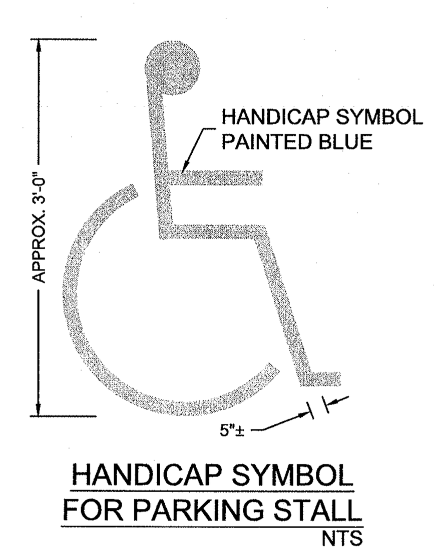

HANDICAP SYMBOL FOR PARKING STALL

NTS

GENERAL PAVING NOTES

- THE CONTRACTOR SHALL NOTIFY THE DESIGN/TOWNSHIP ENGINEER IN WRITING 48 HOURS PRIOR TO PAVING.
- PRIOR TO PAVING, THE SUBGRADE SHALL BE PROOF ROLLED WITH A 10 TON ROLLER AND APPROVED BY THE DESIGN/TOWNSHIP ENGINEER. THE SUBGRADE SHALL BE FREE OF LARGE ROCKS AND ORGANIC MATERIALS, AND SHALL BE COMPACTED. THE DESIGN/TOWNSHIP ENGINEER MAY REQUEST THAT A DENSE GRADED AGGREGATE BE INSTALLED IF CONDITIONS WARRANT.
- ALL SUBGRADE SHALL CONFORM TO THE NEW JERSEY DEPARTMENT OF TRANSPORTATION STANDARD SPECIFICATIONS FOR ROAD AND BRIDGE CONSTRUCTION, LATEST EDITION.
- ALL CURBING SHALL BE INSTALLED AND APPROVED PRIOR TO THE INSTALLATION OF ANY PAVING.
- INSTALLATION METHODS AND MATERIALS FOR ALL BITUMINOUS CONCRETE SHALL FOLLOW THE PROCEDURES AND SPECIFICATIONS OF THE NEW JERSEY DEPARTMENT OF TRANSPORTATION STANDARD SPECIFICATIONS FOR ROAD AND BRIDGE CONSTRUCTION, LATEST EDITION.
- PAVING SHALL NOT TAKE PLACE WHILE RAINING.
- THE DENSE GRADED AGGREGATE SHALL CONFORM TO SECTION 901.08 OR SOIL AGGREGATE DESIGNED I-5, CONFORMING TO SUBSECTION 901.09 AS SHOWN ON TABLE 901-2 OF THE NEW JERSEY DEPARTMENT OF TRANSPORTATION STANDARD SPECIFICATIONS FOR ROAD AND BRIDGE CONSTRUCTION, LATEST EDITION.
- ALL BITUMINOUS STABILIZED BASE MATERIAL SHALL BE HOT MIX I-2 CONFORMING TO SECTIONS 301.02 AND 304.02 OF THE NEW JERSEY DEPARTMENT OF TRANSPORTATION STANDARD SPECIFICATIONS FOR ROAD AND BRIDGE CONSTRUCTION, LATEST EDITION.
- ALL F.A.B.C. WEARING SURFACE (TOP COURSE) MATERIAL SHALL BE HOT MIX I-5 CONFORMING TO SECTIONS 401.02 AND 404.02 OF THE NEW JERSEY DEPARTMENT OF TRANSPORTATION STANDARD SPECIFICATIONS FOR ROAD AND BRIDGE CONSTRUCTION, LATEST EDITION.
- PRIOR TO THE PLACEMENT OF THE TOP COURSE, THE PAVEMENT SHALL BE SWEPT AND ANY AREAS OF DISTRESSED PAVEMENT SHALL BE REPLACED AT THE DIRECTION OF THE DESIGN/TOWNSHIP ENGINEER. WHEN 5 DAYS OR GREATER HAS ELAPSED BEFORE INSTALLATION OF THE SURFACE COURSE, A TACK COAT OF 0.10 GALLONS PER SQUARE YARD SHALL BE APPLIED TO THE BASE COURSE PRIOR TO CONSTRUCTION OF THE SURFACE COURSE TO ENSURE PROPER BOND. THE TACK COAT MATERIAL SHALL BE CUTBACK ASPHALT, GRADE RC-70.
- THE COMPLETED PAVEMENT SHALL BE DENSE AND SMOOTH WITH NO IRREGULARITIES OR HONEYCOMB.
- THE PARKING LOT SHALL BE STRIPED WITH 4" WIDE SINGLE WHITE LINES TO SEPARATE STALLS. THE LOADING AREAS SHALL BE STRIPED WITH 4" WIDE YELLOW DIAGONAL LINES.
- PAVEMENT MARKINGS FOR DIRECTIONAL ARROWS AND PARKING STALLS SHALL BE THERMOPLASTIC LINES.

N:ACAD\NOTES\PAVING.DOC

NYS Education Law
Unauthorized alterations or additions to this plan are a violation of section 7209 (2) of the New York State Education Law. Copies of this map not having the seal of the engineer shall not be valid.
© SESI CONSULTING ENGINEERS D.P.C. 2021
This drawing and all information contained here on is proprietary information of SESI CONSULTING ENGINEERS D.P.C. and may not be copied or reproduced, either in whole or in part, by any method, without written permission of SESI CONSULTING ENGINEERS D.P.C.

rev	date	description	by
1	10/30/20	REV PER TOWNSHIP'S REVIEW LTRS DATED 10/21/20 AND 10/27/20	RDM

dwg by: yy
chk by: RH
scale: AS NOTED
date: 8/31/2020

SESI CONSULTING ENGINEERS
SOILS / FOUNDATIONS
SITE DESIGN
ENVIRONMENTAL
12A MAPLE AVE. PINE BROOK, N.J. 07058 PH: 973-808-9050

STATE OF NEW YORK — FRANZ W. LAKI — 096772 — LICENSED PROFESSIONAL ENGINEER

FRANZ W. LAKI, P.E.
PROFESSIONAL ENGINEER
N.Y. LIC. NO. 96772

700 & 800 BRADLEY HILL ROAD
SECTION 65.18, BLOCK 1, LOTS 3 & 4
TOWN OF ORANGETOWN, ROCKLAND COUNTY, N.Y.

title: DETAILS AND NOTES

job no. 10642
drawing no. D-2

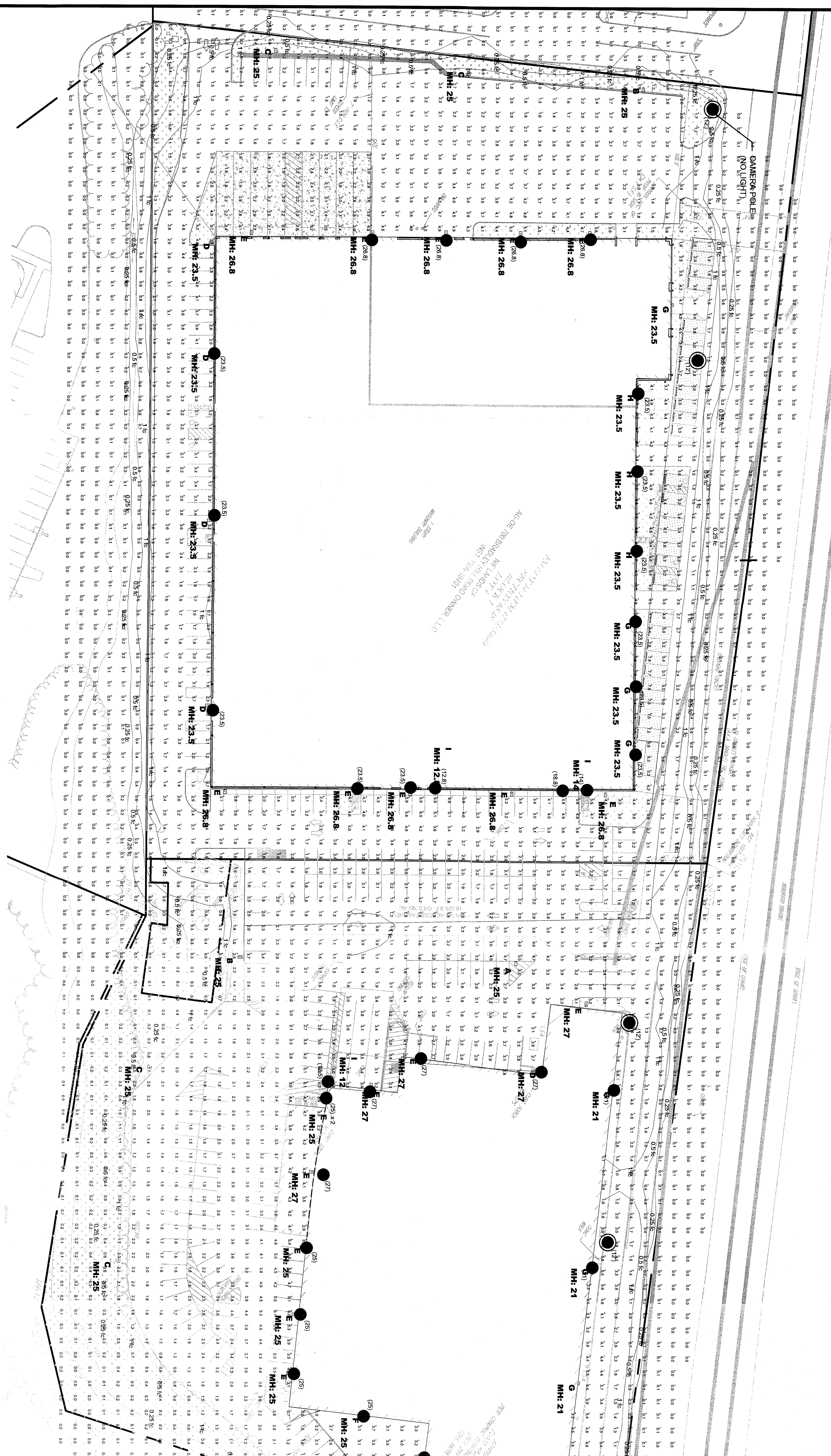

DLA Luminaire Schedule

Symbol	Arrangement	Qty	Type	Manufacturer	Product Code	Lum. Watts	Array Watts	Lum. Lumens	LLF
	SINGLE	1	A	BEACON	VP-S-60L-136-4K7-3-VOLTS-AD-FINISH w/ SSS-B-25-40-A-1-S2-FINISH (POLE-MOUNTED AT 25' AFG)	135.4	135.4	15344	0.950
	SINGLE	2	B	BEACON	VP-S-60L-136-4K7-4-VOLTS-AD-FINISH w/ SSS-B-25-40-A-1-S2-FINISH (POLE-MOUNTED AT 25' AFG)	135.6	135.6	15086	0.950
	SINGLE	6	C	BEACON	VP-S-60L-136-4K7-4W-VOLTS-AD-FINISH w/ SSS-B-25-40-A-1-S2-FINISH (POLE-MOUNTED AT 25' AFG)	133.155	133.155	14774	0.950
	SINGLE	5	D	BEACON	VP-S-60L-136-4K7-3-VOLTS-WB-FINISH (WALL-MOUNTED AT VARIOUS HEIGHTS)	135.4	135.4	15344	0.950
	SINGLE	18	E	BEACON	VP-S-60L-136-4K7-4-VOLTS-WB-FINISH (WALL-MOUNTED AT VARIOUS HEIGHTS)	135.6	135.6	15086	0.950
	SINGLE	2	F	BEACON	VP-S-60L-136-4K7-4W-VOLTS-WB-FINISH (WALL-MOUNTED AT VARIOUS HEIGHTS)	133.155	133.155	14774	0.950
	SINGLE	8	G	KIM LIGHTING	WDM-D-48L-105-4K7-2-VOLTS-FINISH (WALL-MOUNTED AT VARIOUS HEIGHTS)	104	104	12433	0.950
	SINGLE	3	H	KIM LIGHTING	WDM-D-48L-105-4K7-3-VOLTS-FINISH (WALL-MOUNTED AT VARIOUS HEIGHTS)	104	104	12644	0.950
	SINGLE	3	I	KIM LIGHTING	WDS-D-24L-30-4K7-4W-VOLTS-FINISH (WALL-MOUNTED AT VARIOUS HEIGHTS)	28.73	28.73	3252	0.950

Calculation Summary

Label	CalcType	Units	Avg	Max	Min	Avg/Min	Max/Min
BUILDING 700 PARKING	Illuminance	Fc	2.53	7.8	0.7	3.61	11.14
BUILDING 800 PARKING	Illuminance	Fc	2.26	6.6	0.7	3.23	9.43

DIVERSIFIED NJ
55 LANE ROAD
FAIRFIELD, NJ 07004
DESIGNER: MATTHEW STERNER
PHONE: (908) 907-8462
EMAIL: MSTERNER@DIVNJ.COM

LEGEND

(26.8) ● WALL MOUNTED LIGHT (MOUNTED HEIGHT)

(12') ◉ LIGHT POLE (MOUNTED HEIGHT)

NYS Education Law
Unauthorized alterations or additions to this plan are a violation of section 7209 (2) of the New York State Education Law. Copies of this map not having the seal of the engineer shall not be valid.
© SESI CONSULTING ENGINEERS D.P.C. 2020
This drawing and all information contained here on is proprietary information of SESI CONSULTING ENGINEERS D.P.C. and may not be copied or reproduced, either in whole or in part, by any method, without written permission of SESI CONSULTING ENGINEERS D.P.C.

REFERENCE:

1. EXIST CONDITIONS & BOUNDARY FOR 700 BRADLEY HILL ROAD ARE TAKEN FROM DRAWING ENTITLED "BOUNDARY AND TOPOGRAPHIC SURVEY FOR SECTION 65.18, BLOCK 1, LOT 4, 700 BRADLEY HILL ROAD - 'BUILDING #3'," PREPARED BY CONTROL POINT ASSOCIATES, INC, DATED 8/3/2020
2. EXIST CONDITIONS & BOUNDARY FOR 800 BRADLEY HILL ROAD ARE TAKEN FROM DRAWING ENTITLED "BOUNDARY AND TOPOGRAPHIC SURVEY FOR SECTION 65.18, BLOCK 1, LOT 3, 800 BRADLEY HILL ROAD - 'BUILDING #4'," PREPARED BY CONTROL POINT ASSOCIATES, INC, DATED 8/3/2020

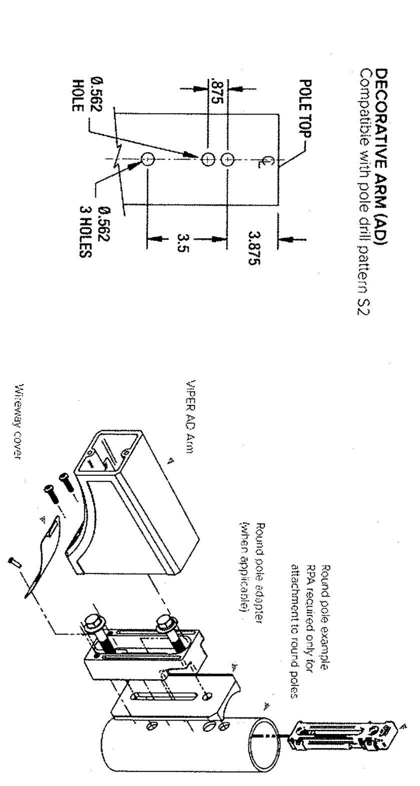

BEACON VIPER SMALL "AD" MOUNTING DETAIL

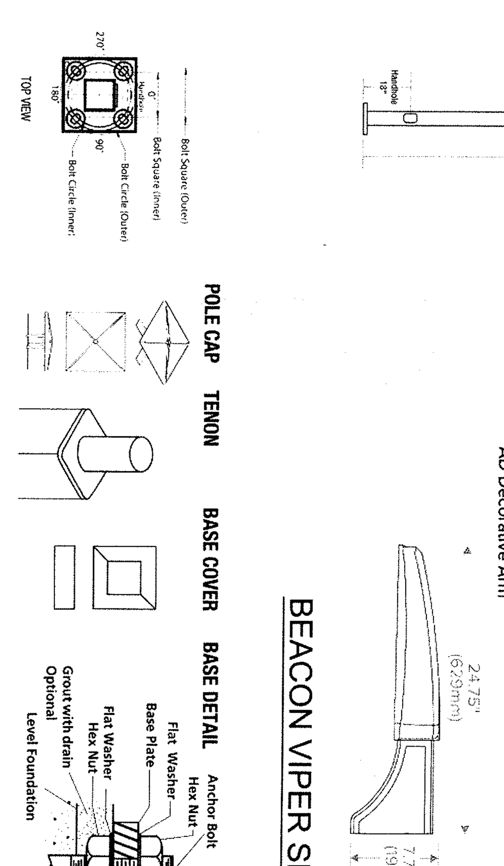

BEACON SSS-B SERIES POLE

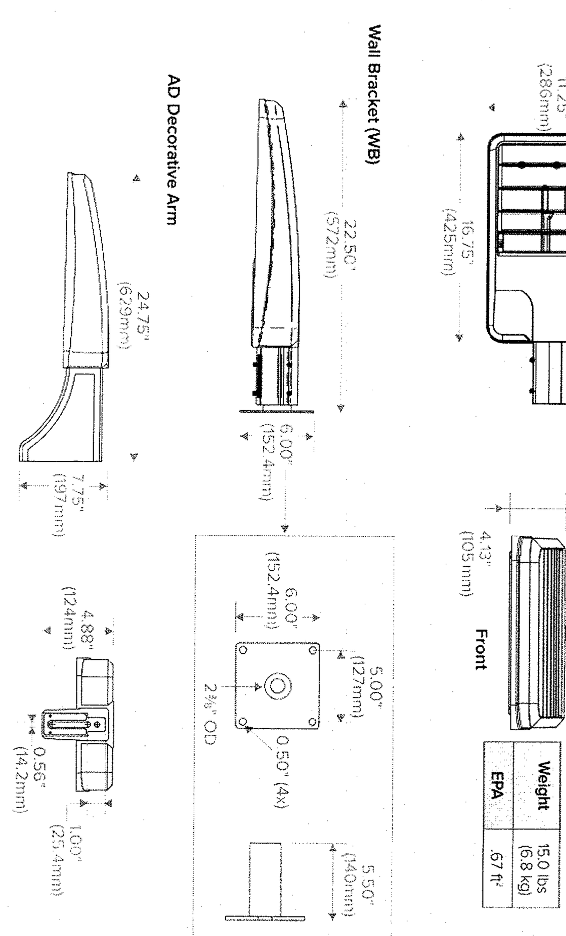

BEACON VIPER SMALL LED LIGHT

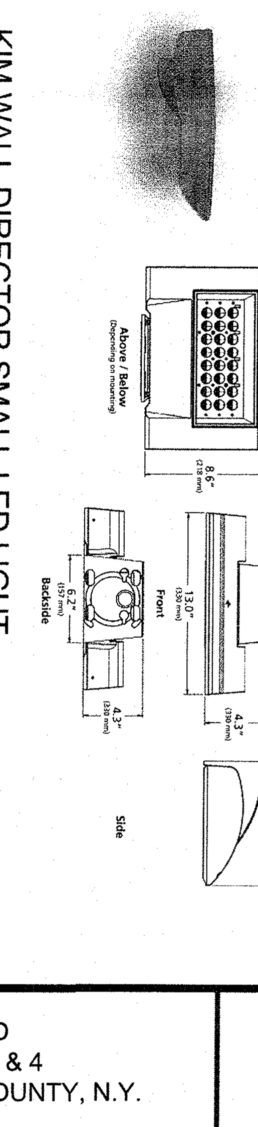

KIM WALL DIRECTOR SMALL LED LIGHT

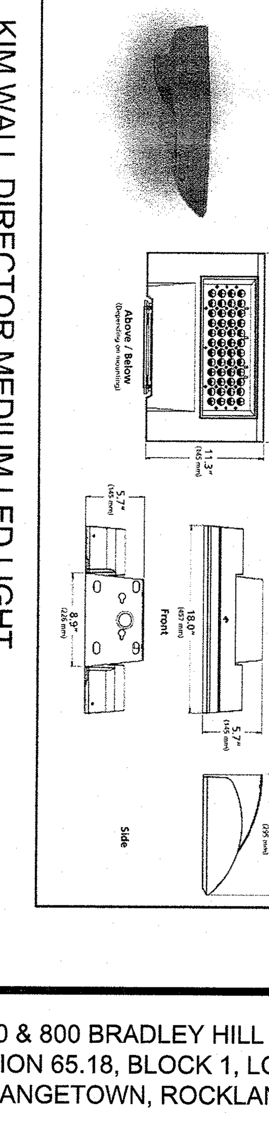

KIM WALL DIRECTOR MEDIUM LED LIGHT

	Length (L)	Width (W)	Height (H)	Weight
CPLED-45W	10"	10"	3 ⅜"	5.6 lbs.
CPLED-80W	14"	14"	4"	10.0 lbs.

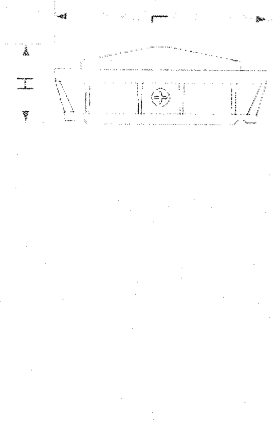

KB LIGHTING CANOPY LED LIGHT

0 20 40 80 120 160

Scale: 1"= 40'

job no. 10642
drawing no.

L-1

11 of 11

700 & 800 BRADLEY HILL ROAD
SECTION 65.18, BLOCK 1, LOTS 3 & 4
TOWN OF ORANGETOWN, ROCKLAND COUNTY, N.Y.

title: LIGHTING PLAN

STATE OF NEW YORK · FRANZ W. LAKI · 096772 · LICENSED PROFESSIONAL ENGINEER

FRANZ W. LAKI, P.E.
PROFESSIONAL ENGINEER
N.Y. LIC. NO. 96772

SESI CONSULTING ENGINEERS
SOILS / FOUNDATIONS
SITE DESIGN
ENVIRONMENTAL
12A MAPLE AVE. PINE BROOK, N.J. 07058 PH: 973-808-9050

dwg by: YY
chk by: FL
scale: AS NOTED
date: 8/31/2020

rev	date	description	by
1	10/30/20	REV PER TOWNSHIP'S REVIEW LTRS DATED 10/21/20 AND 10/27/20	RDM