PRELIMINARY SITE PLAN APPROVAL DRAWINGS

DATA CENTER BUILDING EXPANSION

TAX MAP SECTION 73.20 | BLOCK 1 | LOT 23, 24
ORANGEBURG COUNTY
1 RAMLAND ROAD
TOWN OF ORANGETOWN, NEW YORK

Applicant:
RAMLAND HOLDINGS, LLC
96 FRENEAU AVENUE
MATAWAN, NEW JERSEY 07747
(732) 441-1547

Site Planner, Civil & Traffic Engineer, and Landscape Architect
120 BEDFORD ROAD
ARMONK, NY 10504
(914) 273-5225

Architect:
MICHELLE DROLLETTE ARCHITECT LLC
129 EAST HIGH STREET
HELLERTOWN, PA 18055
(917) 519-1533

Surveyor:
JAY A. GREENWELL, PLS, LLC.
35 WAYNE AVENUE
SUFFERN, NEW YORK 10901
(845) 357-0830

JMC Drawing List:

C-000 COVER SHEET
C-010 EXISTING CONDITIONS
C-100 LAYOUT AND LANDSCAPING PLAN
C-200 GRADING PLAN
C-300 UTILITIES PLAN
C-400 EROSION AND SEDIMENT CONTROL PLAN
C-900 CONSTRUCTION DETAILS
C-901 CONSTRUCTION DETAILS
C-902 CONSTRUCTION DETAILS
C-903 CONSTRUCTION DETAILS
C-904 CONSTRUCTION DETAILS
C-905 CONSTRUCTION DETAILS

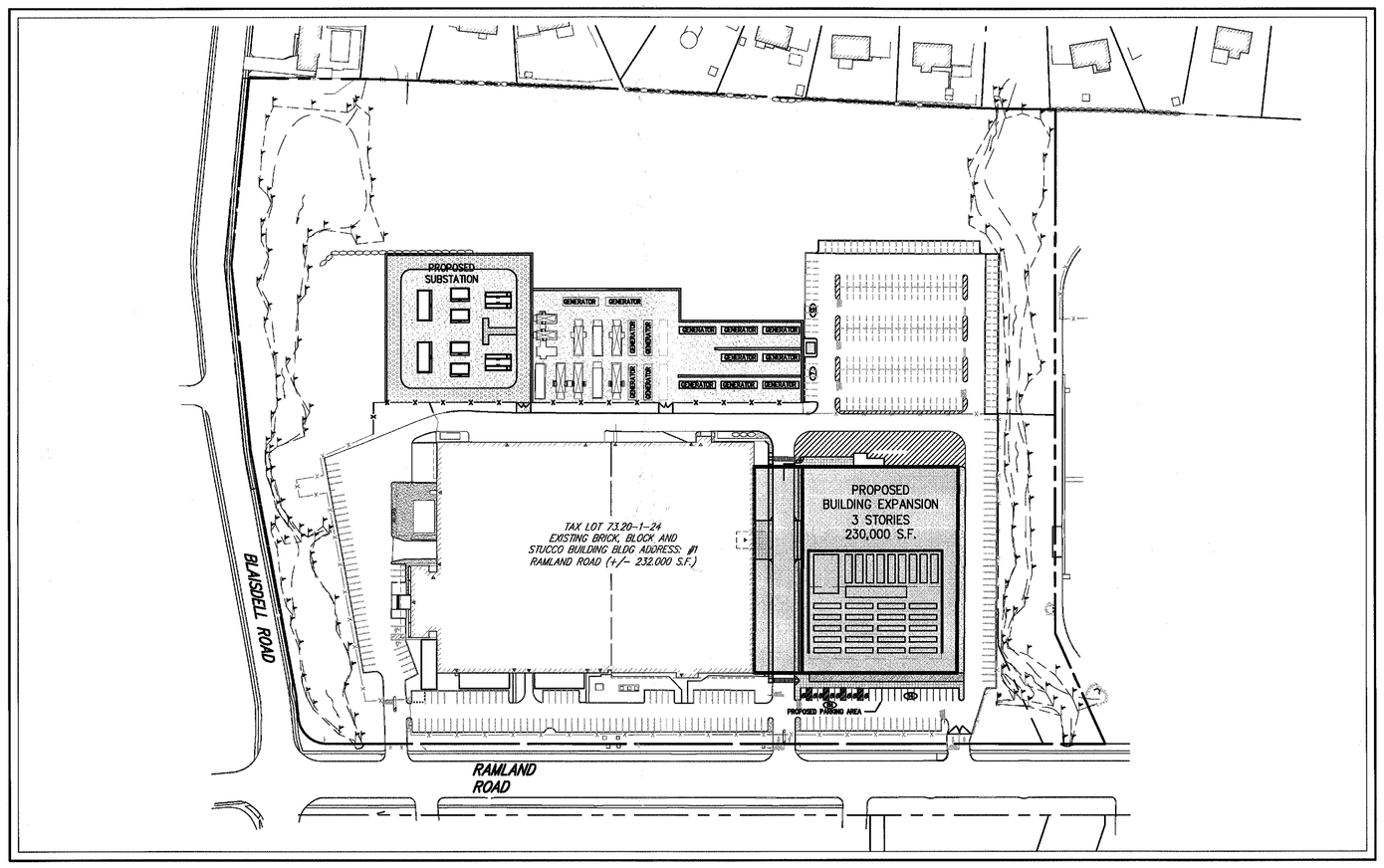

AREA MAP
SCALE: N.T.S

TABLE OF LAND USE

SECTION 73.20, BLOCK 1, LOT 23, 24
ZONE "LIO" – "LIGHT INDUSTRIAL–OFFICE DISTRICT" USE GROUP "CC"
PROPOSED USE: DATA PROCESSING CENTER
FIRE DISTRICT: TAPPAN
WATER DISTRICT: PEARL RIVER
SCHOOL DISTRICT: PEARL RIVER
SEWER DISTRICT: ORANGETOWN

DESCRIPTION		REQUIRED	EXISTING	PROPOSED
LOT AREA	(ACRES)	2 ACRES MIN.	23.8 ACRES	23.8 ACRES
LOT WIDTH	(FEET)	300 MIN.	930	930
LOT FRONTAGE	(FEET)	150 MIN.	1,124	1,124
LOT DEPTH	(FEET)	N/A	–	–
BUILDING HEIGHT: 3 INCHES/FOOT FROM LOT LINE	(FEET)	100' FROM LOT LINE = 25 FT (MAX.)	37	60 (1)
MAXIMUM FLOOR AREA RATIO		0.40	0.23	0.45 (1)
LOT COVERAGE	(PERCENT)	75% MAX.	44%	47%
YARDS				
FRONT BUILDING SETBACK	(FEET)	100 MIN.	92.8 (2)	92.8 (1)
REAR BUILDING SETBACK	(FEET)	100 MIN.	381	381
SIDE BUILDING SETBACK	(FEET)	100 MIN.	169	135
RESIDENTIAL DISTRICT A BUFFER	(FEET)	100 MIN.	100	+100
PARKING SUMMARY				
TOTAL SPACES REQUIRED RESEARCH/LABORATORIES: 1 SPACE/2 EMPLOYEES: (20 EMPLOYEES = 10 SPACES) OFFICES: 1 SPACE/200 S.F. OF GROSS FLOOR AREA (60,000 S.F. = 300 SPACES)		310	747	425
HANDICAP SPACES PROVIDED	(SPACES)	9	15	10
STANDARD SPACES PROVIDED	(SPACES)	–	732	415

(1) VARIANCE REQUIRED
(2) VARIANCE PREVIOUSLY GRANTED

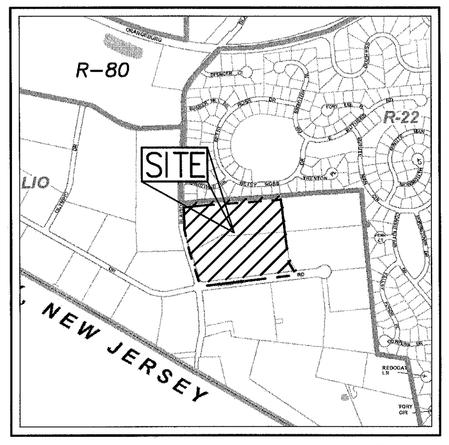

ZONING MAP
SCALE: 1" = 1,000'
SOURCE: TITLE / YEAR

ORANGETOWN ZONING DESIGNATION KEY	
R-22	MEDIUM DENSITY RESIDENCE ZONE
R-80	RURAL RESIDENCE ZONE
LIO	LIGHT INDUSTRIAL–OFFICE ZONE

LEGEND	
— — —	SITE PROPERTY LINE
———	ZONING BOUNDARY

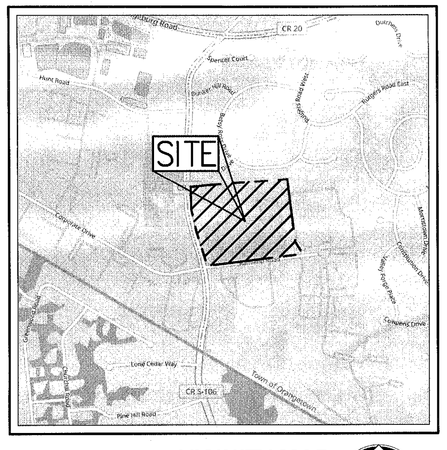

VICINITY MAP
SCALE: 1" = 1,000'
SOURCE: TITLE / YEAR

GENERAL CONSTRUCTION NOTES APPLY TO ALL WORK HEREIN:

1. PRIOR TO CONSTRUCTION, THE CONTRACTOR SHALL CALL 811 "DIG SAFELY" (1-800-962-7962) TO HAVE UNDERGROUND UTILITIES LOCATED. EXPLORATORY EXCAVATIONS SHALL COMPLY WITH CODE 753 REQUIREMENTS. NO WORK SHALL COMMENCE UNTIL ALL THE OPERATORS HAVE NOTIFIED THE CONTRACTOR THAT THEIR UTILITIES HAVE BEEN LOCATED. THE CONTRACTOR SHALL BE RESPONSIBLE FOR THE PRESERVATION OF ALL PUBLIC AND PRIVATE UNDERGROUND AND SURFACE UTILITIES AND STRUCTURES AT OR ADJACENT TO THE SITE OF CONSTRUCTION, INSOFAR AS THEY MAY BE ENDANGERED BY THE CONTRACTOR'S OPERATIONS. THIS SHALL HOLD TRUE WHETHER OR NOT THEY ARE SHOWN ON THE CONTRACT DRAWINGS. IF THEY ARE SHOWN ON THE DRAWINGS, THEIR LOCATIONS ARE NOT GUARANTEED EVEN THOUGH THE INFORMATION WAS OBTAINED FROM THE BEST AVAILABLE SOURCES, AND IN ANY EVENT, OTHER UTILITIES ON THESE PLANS MAY BE ENCOUNTERED IN THE FIELD. THE CONTRACTOR SHALL, AT HIS OWN EXPENSE, IMMEDIATELY REPAIR OR REPLACE ANY STRUCTURES OR UTILITIES THAT HE DAMAGES, AND SHALL CONSTANTLY PROCEED WITH CAUTION TO PREVENT UNDUE INTERRUPTION OF UTILITY SERVICE.

2. CONTRACTOR SHALL HAND DIG TEST PITS TO VERIFY THE LOCATION OF ALL EXISTING UNDERGROUND UTILITIES PRIOR TO THE START OF CONSTRUCTION. CONTRACTOR SHALL VERIFY EXISTING UTILITIES DEPTHS AND ADVISE OF ANY CONFLICTS WITH PROPOSED UTILITIES. IF CONFLICTS ARE PRESENT, THE OWNER'S FIELD REPRESENTATIVE, JMC, PLLC AND THE APPLICABLE MUNICIPALITY OR AGENCY SHALL BE NOTIFIED IN WRITING. THE EXISTING/PROPOSED UTILITIES RELOCATION SHALL BE DESIGNED BY JMC, PLLC.

3. CONTRACTOR IS RESPONSIBLE FOR OBTAINING ANY AND ALL LOCAL PERMITS REQUIRED.

4. ALL WORK SHALL BE DONE IN STRICT COMPLIANCE WITH ALL APPLICABLE NATIONAL, STATE, AND LOCAL CODES, STANDARDS, ORDINANCES, RULES, AND REGULATIONS. ALL CONSTRUCTION WORK SHALL BE PERFORMED IN ACCORDANCE WITH ALL SAFETY CODES. APPLICABLE SAFETY CODES MEAN THE LATEST EDITION INCLUDING ANY AND ALL AMENDMENTS, REVISIONS, AND ADDITIONS THERETO, TO THE FEDERAL DEPARTMENT OF LABOR, OCCUPATIONAL SAFETY AND HEALTH ADMINISTRATION'S OCCUPATIONAL SAFETY AND HEALTH STANDARDS (OSHA); AND APPLICABLE SAFETY, HEALTH REGULATIONS AND BUILDING CODES FOR CONSTRUCTION IN THE STATE OF NEW YORK. THE CONTRACTOR SHALL BE RESPONSIBLE FOR GUARDING AND PROTECTING ALL OPEN EXCAVATIONS IN ACCORDANCE WITH THE PROVISION OF SECTION 107-05 (SAFETY AND HEALTH REQUIREMENTS) OF THE NYSDOT STANDARD SPECIFICATIONS. IF THE CONTRACTOR PERFORMS ANY HAZARDOUS CONSTRUCTION PRACTICES, ALL OPERATIONS IN THE AFFECTED AREA SHALL BE DISCONTINUED AND IMMEDIATE ACTION SHALL BE TAKEN TO CORRECT THE SITUATION TO THE SATISFACTION OF THE APPROVAL AUTHORITY HAVING JURISDICTION.

5. CONTRACTOR SHALL MAINTAIN ACCESS TO ALL PROPERTIES AFFECTED BY THE SCOPE OF WORK SHOWN HEREON AT ALL TIMES TO THE SATISFACTION OF THE OWNERS REPRESENTATIVE. RAMPING CONSTRUCTION TO PROVIDE ACCESS MAY BE CONSTRUCTED WITH SUBBASE MATERIAL EXCEPT THAT TEMPORARY ASPHALT CONCRETE SHALL BE PLACED AS DIRECTED BY THE ENGINEER. THE CONTRACTOR SHALL BE RESPONSIBLE FOR PROVIDING SAFE PEDESTRIAN ACCESS AT ALL TIMES.

6. CONTRACTOR SHALL MAINTAIN THE INTEGRITY OF EXISTING PAVEMENT TO REMAIN.

NOT FOR CONSTRUCTION

COPYRIGHT © 2021 by JMC All Rights Reserved. No part of this document may be reproduced, stored in a retrieval system, or transmitted in any form or by means, electronic, mechanical, photocopying, recording or otherwise, without the prior written permission of JMC PLANNING, ENGINEERING, LANDSCAPE ARCHITECTURE & LAND SURVEYING, PLLC | JMC SITE DEVELOPMENT CONSULTANTS, LLC | JOHN MEYER CONSULTING, INC. (JMC). USE OF THIS DOCUMENT IN WHOLE OR IN PART WITHOUT WRITTEN PERMISSION OF JMC IS PROHIBITED.

SC ADOPTED - Feb 1, 2023

PLANNING BOARD MINUTES NOV 8 2023 Town Of Orangetown

ANY ALTERATION OF PLANS, SPECIFICATIONS, PLATS AND REPORTS BEARING THE SEAL OF A LICENSED PROFESSIONAL ENGINEER OR LICENSED LAND SURVEYOR IS A VIOLATION OF ARTICLE 145 OF THE NEW YORK STATE EDUCATION LAW, EXCEPT AS PROVIDED FOR BY SECTION 7209, SUBSECTION 2.

SUBSURFACE UTILITY LOCATIONS ARE BASED ON A COMPILATION OF FIELD EVIDENCE, AVAILABLE RECORD PLANS AND/OR UTILITY MARK-OUTS. THE LOCATION OR COMPLETENESS OF UNDERGROUND INFORMATION CANNOT BE GUARANTEED. VERIFY THE ACTUAL LOCATION OF ALL UTILITIES PRIOR TO EXCAVATION OR CONSTRUCTION.

811 Know what's below. Call before you dig.

No.	Revision	Date	By

Previous Editions Obsolete

JMC Planning, Engineering, Landscape Architecture & Land Surveying, PLLC
JMC Site Development Consultants, LLC
John Meyer Consulting, Inc.
120 BEDFORD ROAD • ARMONK, NY 10504
voice 914.273.5225 • fax 914.273.2102
www.jmcpllc.com

Drawn:	BD	Approved:	RR
Scale:	NOT TO SCALE		
Date:	10/18/2022		
Project No:	13016		
13016-00MD	COVER	COVER.scr	
Drawing No:	C-000		

NOT FOR CONSTRUCTION

COPYRIGHT © 2013 by JMC All Rights Reserved. No part of this document may be reproduced, stored in a retrieval system, or transmitted in any form or by means, electronic, mechanical, photocopying, recording or otherwise, without the prior written permission of JMC PLANNING, ENGINEERING, LANDSCAPE ARCHITECTURE & LAND SURVEYING, PLLC | JMC SITE DEVELOPMENT CONSULTANTS, LLC | JOHN MEYER CONSULTING, INC. (JMC). Any modifications or alterations to this document without the written permission of JMC shall render them invalid and unusable.

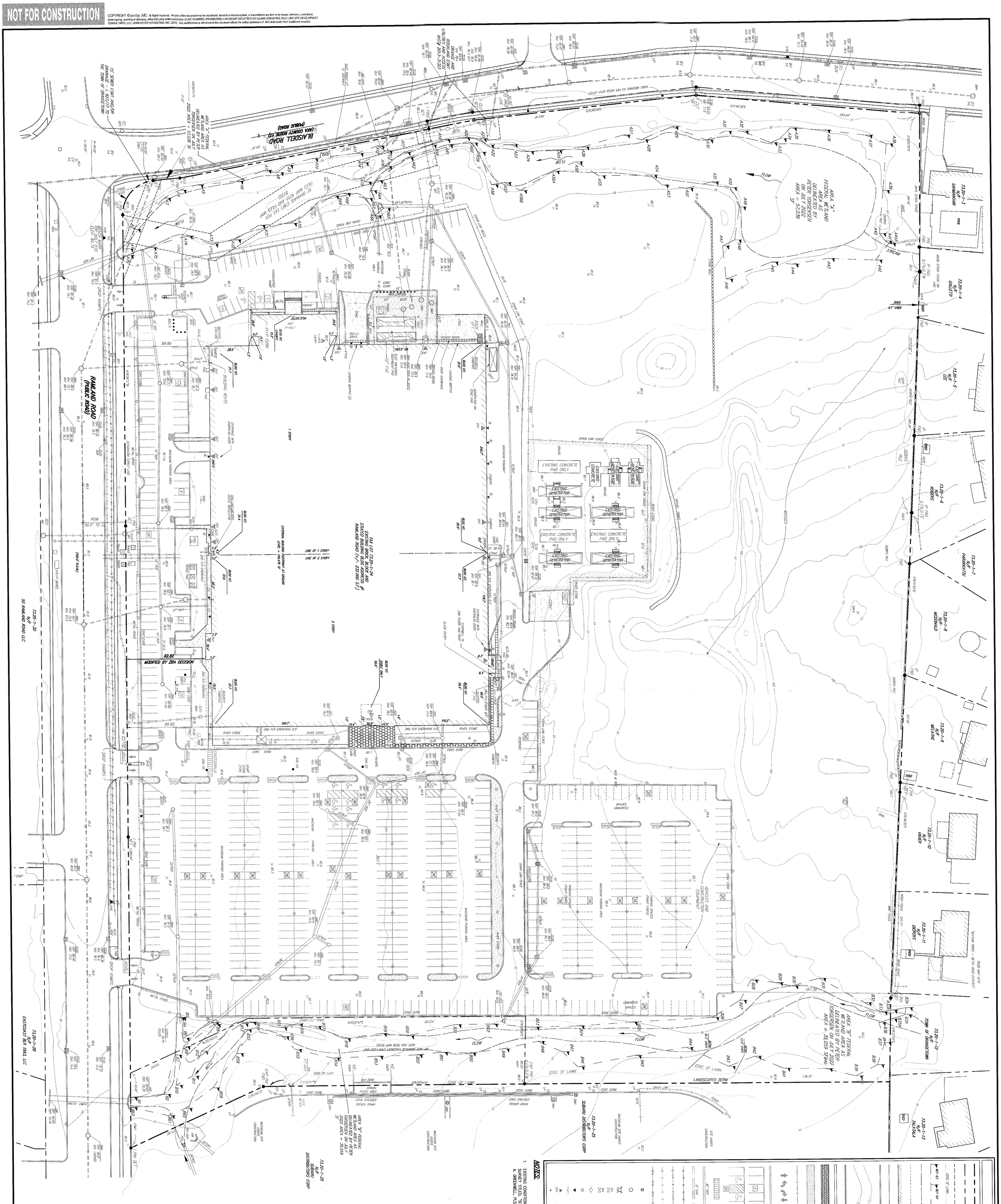

NOTES:

1. EXISTING CONDITIONS DEPICTED ON THIS PLAN HAVE BEEN TAKEN FROM SURVEY TITLED, "SITE DEVELOPMENT PLAN FOR EXPANSION", PREPARED BY JAY A. GREENWELL, PLS, LLC, DATED 06/04/2022.

LEGEND

- EXISTING PROPERTY LINE
- ADJACENT PROPERTY LINE
- EXISTING EASEMENT LINE
- MISCELLANEOUS BOUNDARIES AND LABELS
- EXISTING WETLAND LINE AND DELINEATION
- EXISTING WATERCOURSE LINE
- EXISTING BUILDING OVERHANG
- EXISTING BUILDING LINE
- EXISTING PAVEMENT EDGE
- EXISTING CURB LINE
- EXISTING MINOR CONTOUR
- EXISTING INDEX CONTOUR
- EXISTING STONE WALL
- EXISTING RETAINING WALL
- EXISTING PAVERS STONE
- EXISTING GRAVEL
- EXISTING FENCE
- EXISTING DIRECTIONAL ARROWS
- EXISTING PAINT
- EXISTING PARKING WITH NUMBER OF SPACES
- EXISTING HANDICAP PARKING WITH NUMBER OF SPACES
- EXISTING PEDESTRIAN CROSSING
- EXISTING STORM DRAIN LINE AND SIZE
- EXISTING SANITARY LINE, SIZE AND FLOW DIRECTION
- EXISTING WATER LINE
- EXISTING ELECTRIC LINE
- EXISTING GAS LINE
- EXISTING OVERHEAD WIRES
- EXISTING DRAIN INLET
- EXISTING MANHOLE
- EXISTING FIRE HYDRANT
- EXISTING GAS VALVE
- EXISTING WATER VALVE
- EXISTING UTILITY POLE
- EXISTING LIGHT POLE
- EXISTING LIGHT WALL MOUNTED
- EXISTING SIGN
- EXISTING BUILDING ENTRANCE
- EXISTING BOLLARD

ANY ALTERATION OF PLANS, SPECIFICATIONS, PLATS AND REPORTS BEARING THE SEAL OF A LICENSED PROFESSIONAL ENGINEER OR LICENSED LAND SURVEYOR IS A VIOLATION OF ARTICLE 145 OF THE NEW YORK STATE EDUCATION LAW, EXCEPT AS PROVIDED FOR BY SECTION 7209, SUBSECTION 2.

Drawn:	EL	Approved:	RR
Scale:	1" = 40'		
Date:	10/18/2022		
Project No:	13016		
13016-1-ROMN			
Drawing No:	C-010	EXIST.scr	

C-010

EXISTING CONDITIONS PLAN

DATA CENTER BUILDING EXPANSION

1 RAMLAND ROAD
TOWN OF ORANGETOWN, NEW YORK

JMC Planning, Engineering, Landscape Architecture & Land Surveying, PLLC
JMC Site Development Consultants, LLC
John Meyer Consulting, Inc.
120 BEDFORD ROAD • ARMONK, NY 10504
voice 914.273.5225 • fax 914.273.2102
www.jmcpllc.com

APPLICANT/OWNER:
RAMLAND HOLDINGS, LLC
96 FRENEAU AVENUE
MATAWAN, NEW JERSEY 07747

ARCHITECT:
MICHELLE DROLETTE ARCHITECT, LLC
129 EAST HIGH STREET
HELLERTOWN, PA 18055

No.	Revision	Date	By

Previous Editions Obsolete

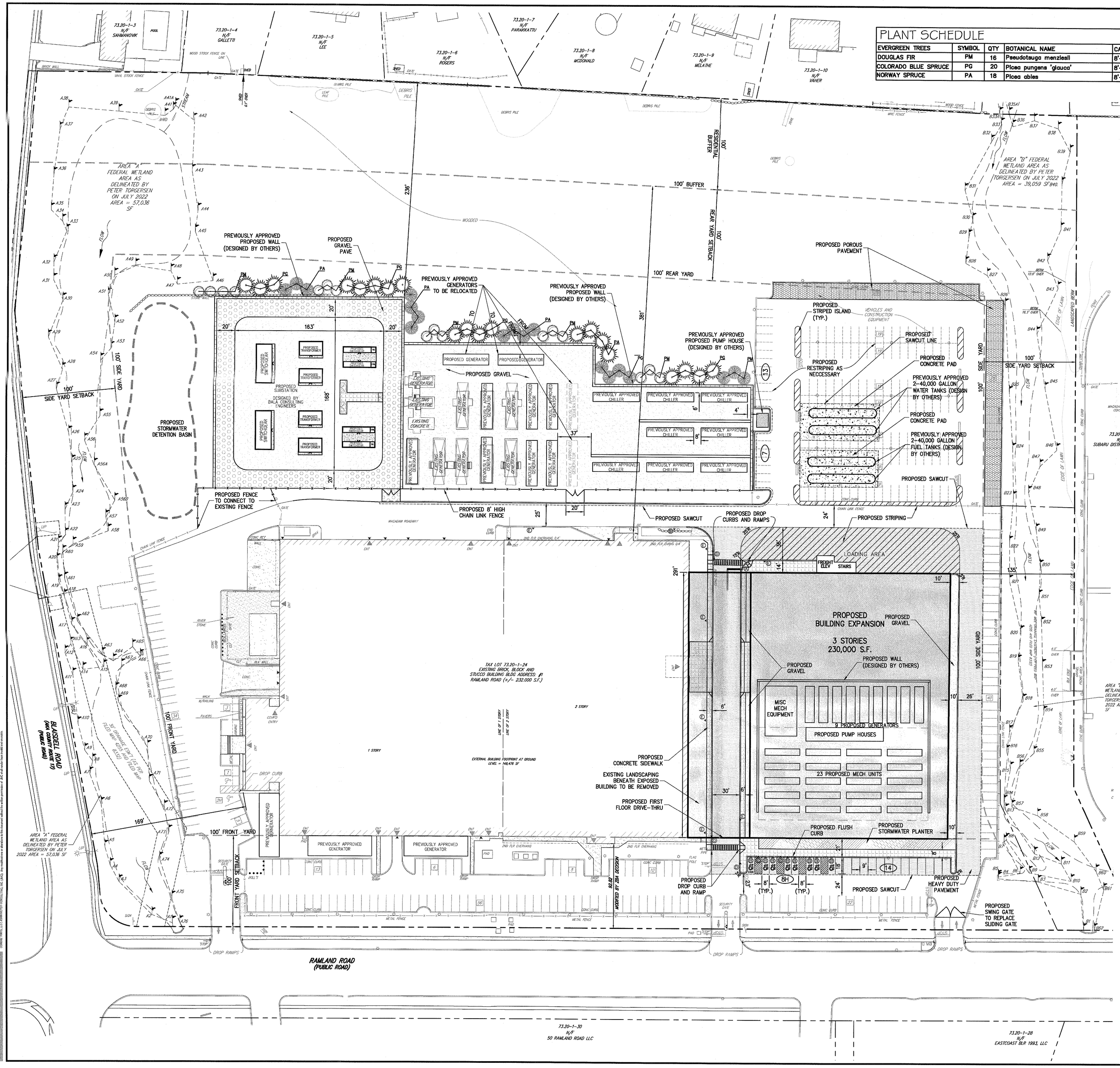

PLANT SCHEDULE

EVERGREEN TREES	SYMBOL	QTY	BOTANICAL NAME	CAL./HT.	ROOT COND.
DOUGLAS FIR	PM	16	Pseudotsuga menziesii	8'-10' HT.	B & B
COLORADO BLUE SPRUCE	PG	20	Picea pungens 'glauca'	8'-10' HT.	B & B
NORWAY SPRUCE	PA	18	Picea abies	8'-10' HT.	B & B

LEGEND

- EXISTING PROPERTY LINE
- ADJACENT PROPERTY LINE
- EXISTING SETBACK LINE
- EXISTING WETLAND LINE AND DELINEATION
- EXISTING WATERCOURSE BOUNDARY
- EXISTING BUILDING OVERHANG
- EXISTING BUILDING LINE
- EXISTING PAVEMENT EDGE
- EXISTING CURB LINE
- EXISTING STONE WALL
- EXISTING RETAINING WALL
- EXISTING FENCE
- EXISTING TREE LINE
- EXISTING PAINT
- EXISTING PARKING WITH NUMBER OF SPACES
- EXISTING HANDICAP PARKING WITH NUMBER OF SPACES
- EXISTING PEDESTRIAN CROSSING
- EXISTING UTILITY POLE
- EXISTING LIGHT POLE
- EXISTING SIGN
- PROPOSED BUILDING LINE
- PROPOSED CONCRETE CURB
- PROPOSED DROP CURB & RAMP (DET 25)
- PROPOSED SAWCUT LINE
- PROPOSED HANDICAPPED PARKING SPACES WITH NUMBER OF SPACES INDICATED
- PROPOSED PARKING SPACES WITH NUMBER OF SPACES INDICATED
- PROPOSED 12" WIDE WHITE STOP LINE
- PROPOSED PEDESTRIAN CROSSING
- PROPOSED RETAINING WALL (DESIGN BY OTHERS)
- PROPOSED CONCRETE SIDEWALK
- PROPOSED MONOLITHIC CONCRETE SIDEWALK & CURB
- PROPOSED DROP CURB AND RAMP
- PROPOSED HEAVY DUTY PAVEMENT
- PROPOSED CONCRETE PAD
- PROPOSED GRAVEL
- PROPOSED GRAVEL PAVE
- PROPOSED LANDSCAPED AREA
- PROPOSED RELOCATED CHAIN LINK FENCE
- TRAFFIC SIGN LOCATION & DESIGNATION
- PROPOSED TREES

NOTES:

1. EXISTING CONDITIONS DEPICTED ON THIS PLAN HAVE BEEN TAKEN FROM SURVEY ENTITLED, "SITE DEVELOPMENT PLAN FOR EXPANSION," PREPARED BY JAY A. GREENWELL, PLS, LLC., DATED 08/04/2022.
2. AT LEAST ONE WEEK PRIOR TO THE COMMENCEMENT OF ANY WORK, INCLUDING THE INSTALLATION OF EROSION CONTROL DEVICES OR THE REMOVAL OF TREES AND VEGETATION, A PRE-CONSTRUCTION MEETING MUST BE HELD WITH THE TOWN OF ORANGETOWN DEPARTMENT OF ENVIRONMENTAL MANAGEMENT AND ENGINEERING, SUPERINTENDENT OF HIGHWAYS AND THE OFFICE OF BUILDING, ZONING AND PLANNING ADMINISTRATION AND ENFORCEMENT. IT IS THE RESPONSIBILITY AND THE OBLIGATION OF THE PROPERTY OWNER TO ARRANGE SUCH A MEETING.
3. EXISTING FENCING DEPICTED ON THIS PLAN HAS BEEN TAKEN FROM DRAWING ENTITLED "SITE LAYOUT" PREPARED BY SERVICE WORKS INC. DATED 10/07/2014.

SIGN TABLE

DESIGNATION NUMBER	SIGN	SIZE	DESCRIPTION	MOUNTING TYPE	MOUNTING HEIGHT	REGULATORY	REFLECTORIZED
A	STOP	30"X30"	WHITE ON RED	STEEL CHANNEL	7'-0"	R1-1	X
B	RESERVED PARKING	12"X18"	GREEN & BLUE ON WHITE	STEEL CHANNEL	7'-0"	R7-8	X
C	NO PARKING ANY TIME	12"X18"	RED ON WHITE	STEEL CHANNEL	7'-0"	NYP1-2	X
D		30"X30" 30"X18"	BLACK ON YELLOW	STEEL CHANNEL	7'-0"	W11-2 W16-7P	X
E	NO PARKING FIRE LANE	12"X18"	RED ON WHITE	STEEL CHANNEL	7'-0"	NYP1-2 (MODIFIED)	X

No.	Revision	Date	By
	Previous Editions Obsolete		

APPLICANT/OWNER:
RAMLAND HOLDINGS, LLC
916 FRENEAU AVENUE
MATTAWAN, NEW JERSEY 07747

ARCHITECT:
MICHELLE DROLETTE ARCHITECT, LLC
129 EAST HIGH STREET
HELLERTOWN, PA 18055

JMC Planning, Engineering, Landscape Architecture & Land Surveying, PLLC
JMC Site Development Consultants, LLC
John Meyer Consulting, Inc.
120 BEDFORD ROAD • ARMONK, NY 10504
voice 914.273.5225 • fax 914.273.2102
www.jmcpllc.com

LAYOUT AND LANDSCAPING PLAN

DATA CENTER BUILDING EXPANSION
1 RAMLAND ROAD
TOWN OF ORANGETOWN, NEW YORK

ANY ALTERATION OF PLANS, SPECIFICATIONS, PLATS AND REPORTS BEARING THE SEAL OF A LICENSED PROFESSIONAL ENGINEER OR LICENSED LAND SURVEYOR IS A VIOLATION OF ARTICLE 145 OF THE NEW YORK STATE EDUCATION LAW, EXCEPT AS PROVIDED FOR BY SECTION 7209, SUBSECTION 2.

Drawn:	BD
Approved:	RR
Scale:	1" = 40'
Date:	10/18/2022
Project No:	13016
13016-LAYOUT	C-100	LAY.scr
Drawing No:	C-100

NOT FOR CONSTRUCTION

COPYRIGHT © 2023 by JMC All Rights Reserved. No part of this document may be reproduced, stored in a retrieval system, or transmitted in any form or by means, electronic, mechanical, photocopying, recording or otherwise, without the prior written permission of JMC PLANNING, ENGINEERING, LANDSCAPE ARCHITECTURE & LAND SURVEYING, PLLC | JMC SITE DEVELOPMENT CONSULTANTS, LLC | JOHN MEYER CONSULTING, INC. (JMC). Any use of this document on other projects, for additions to this project, or for completion of this project by others is prohibited and is the property of the client for use on the project specified herein.

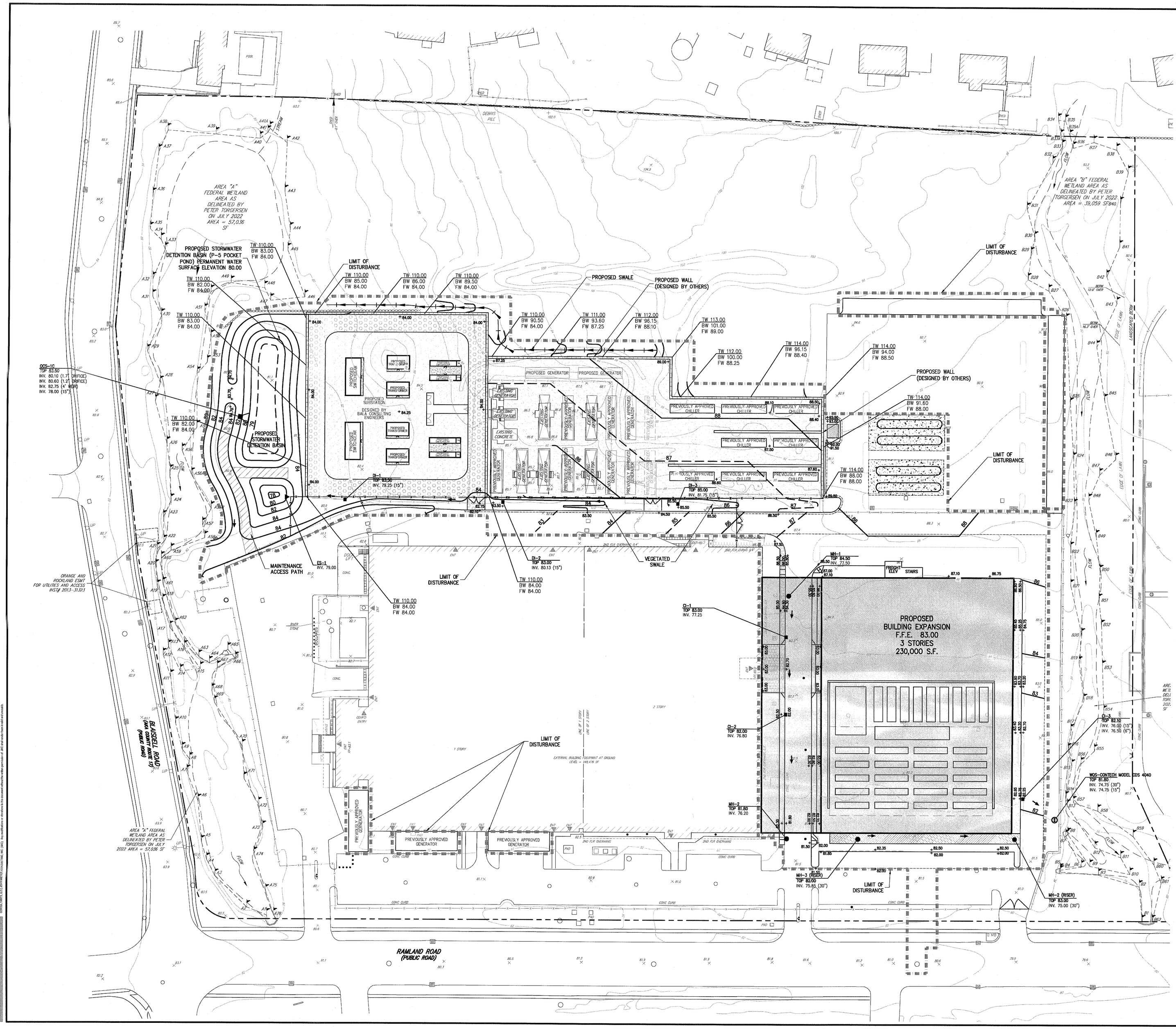

LEGEND

- EXISTING PROPERTY LINE
- ADJACENT PROPERTY LINE
- EXISTING EASEMENT LINE
- EXISTING WETLAND LINE AND DELINEATION
- EXISTING BUILDING OVERHANG
- EXISTING BUILDING LINE
- EXISTING PAVEMENT EDGE
- EXISTING CURB LINE
- EXISTING CONTOUR
- EXISTING INDEX CONTOUR
- EXISTING STONE WALL
- EXISTING RETAINING WALL
- EXISTING FENCE
- EXISTING DRAIN INLET
- EXISTING MANHOLE
- EXISTING FIRE HYDRANT
- EXISTING GAS VALVE
- EXISTING WATER VALVE
- EXISTING UTILITY POLE
- EXISTING SIGN
- PROPOSED BUILDING LINE
- PROPOSED CONCRETE CURB
- PROPOSED CONCRETE SIDEWALK
- PROPOSED DROP CURB AND RAMP
- PROPOSED FINISHED GRADE
- PROPOSED SPOT GRADE
- PROPOSED TYPE DI DRAIN INLET
- PROPOSED WATER QUALITY STRUCTURE
- PROPOSED OUTLET CONTROL STRUCTURE
- PROPOSED RETAINING WALL (DESIGN BY OTHERS)
- PROPOSED LIMIT OF DISTURBANCE

No.	Revision	Date	By
	Previous Editions Obsolete		

APPLICANT/OWNER:
RAMLAND HOLDINGS, LLC
96 FRENEAU AVENUE
MATAWAN, NEW JERSEY 07747

ARCHITECT:
MICHELLE DROLETTE ARCHITECT, LLC
129 EAST HIGH STREET
HELLERTOWN, PA 18055

JMC Planning, Engineering, Landscape Architecture & Land Surveying, PLLC
JMC Site Development Consultants, LLC
John Meyer Consulting, Inc.
120 BEDFORD ROAD • ARMONK, NY 10504
voice 914.273.5225 • fax 914.273.2102
www.jmcpllc.com

NOTES:

1. EXISTING CONDITIONS DEPICTED ON THIS PLAN HAVE BEEN TAKEN FROM SURVEY ENTITLED, "SITE DEVELOPMENT PLAN FOR EXPANSION," PREPARED BY JAY A. GREENWELL, PLS, LLC., DATED 08/04/2022.
2. WETLAND DELINEATION DEPICTED ON THIS PLAN HAVE BEEN TAKEN FROM SURVEY ENTITLED, "SITE DEVELOPMENT PLAN FOR EXPANSION," PREPARED BY JAY A. GREENWELL, PLS, LLC., DATED 08/04/2022.

(PROPOSED GRADE) BW +TW +FW (PROPOSED GRADE)

RETAINING WALL SPOT GRADE LEGEND

GRADING PLAN

DATA CENTER BUILDING EXPANSION

1 RAMLAND ROAD
TOWN OF ORANGETOWN, NEW YORK

ANY ALTERATION OF PLANS, SPECIFICATIONS, PLATS AND REPORTS BEARING THE SEAL OF A LICENSED PROFESSIONAL ENGINEER OR LICENSED LAND SURVEYOR IS A VIOLATION OF ARTICLE 145 OF THE NEW YORK STATE EDUCATION LAW, EXCEPT AS PROVIDED FOR BY SECTION 7209, SUBSECTION 2.

Drawn: BD	Approved: RR
Scale: 1" = 40'	
Date: 10/18/2022	
Project No.: 13016	
13016-GRADING	GRADING	GRAD.scr
Drawing No.: C-200	

NOT FOR CONSTRUCTION

COPYRIGHT © 2023 by JMC All Rights Reserved. No part of this document may be reproduced, stored in a retrieval system, or transmitted in any form or by means, electronic, mechanical, photocopying, recording or otherwise, without the prior written permission of JMC PLANNING, ENGINEERING, LANDSCAPE ARCHITECTURE & LAND SURVEYING, PLLC | JMC SITE DEVELOPMENT CONSULTANTS, LLC | JOHN MEYER CONSULTING, INC. Any modifications or alterations to this document without the written permission of JMC shall render them invalid and unusable.

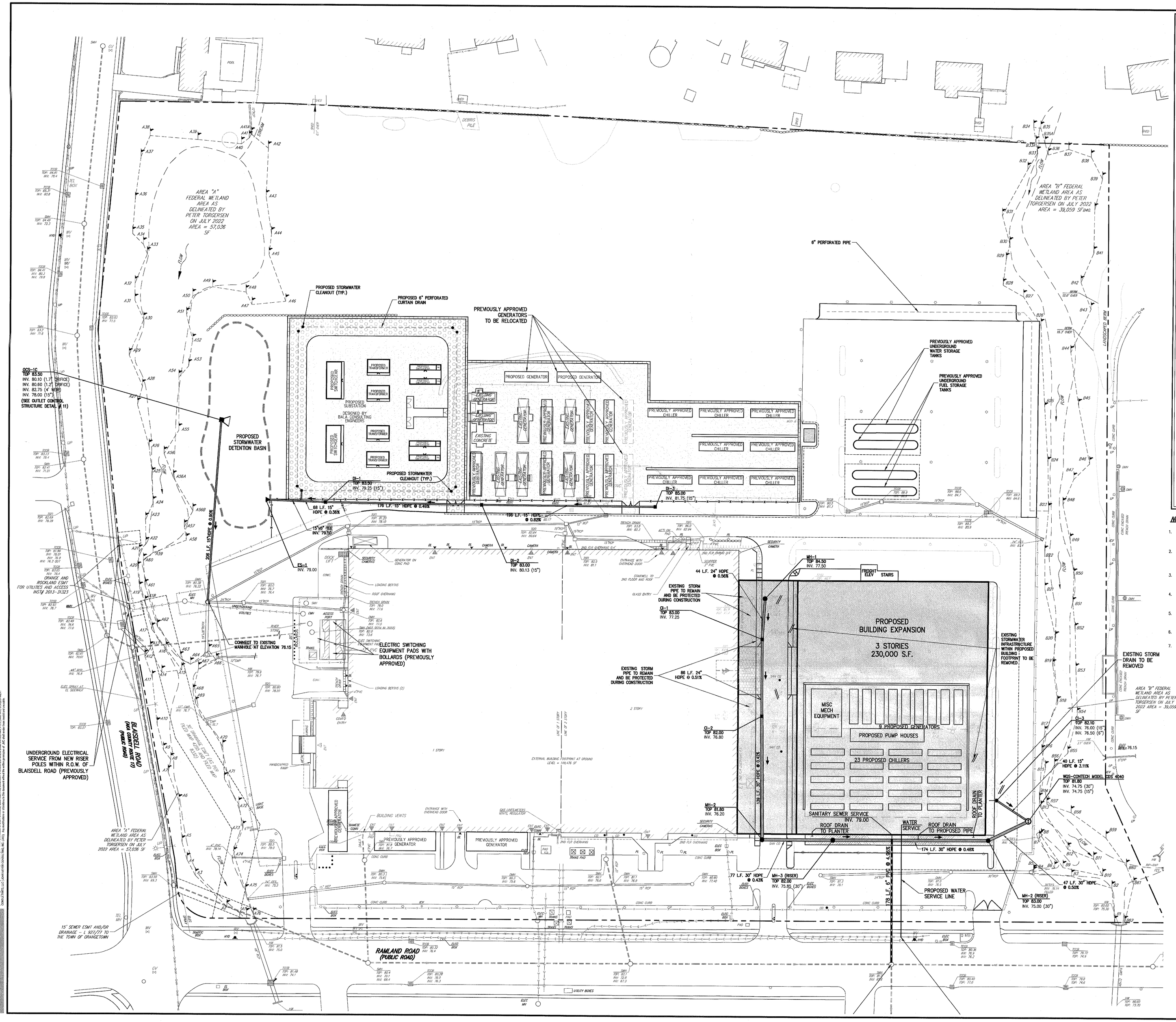

LEGEND

- EXISTING PROPERTY LINE
- ADJACENT PROPERTY LINE
- EXISTING EASEMENT LINE
- A63 A64 A65 — EXISTING WETLAND LINE AND DELINEATION
- EXISTING BUILDING OVERHANG
- EXISTING BUILDING LINE
- EXISTING PAVEMENT EDGE
- EXISTING CURB LINE
- 90 — EXISTING CONTOUR
- 100 — EXISTING INDEX CONTOUR
- EXISTING STONE WALL
- EXISTING RETAINING WALL
- EXISTING FENCE
- 36" RCP — EXISTING STORM DRAIN LINE AND SIZE
- 8" SAN — EXISTING SANITARY LINE AND SIZE
- EXISTING WATER LINE
- EXISTING GAS LINE
- EXISTING OVERHEAD WIRES
- EXISTING DRAIN INLET
- EXISTING MANHOLE
- EXISTING FIRE HYDRANT
- EXISTING GAS VALVE
- EXISTING WATER VALVE
- EXISTING UTILITY POLE
- EXISTING LIGHT POLE
- EXISTING SIGN
- PROPOSED BUILDING LINE
- PROPOSED CONCRETE CURB
- PROPOSED CONCRETE SIDEWALK
- PROPOSED DROP CURB AND RAMP
- MH — PROPOSED STORM DRAIN MANHOLE
- DI — PROPOSED TYPE DI DRAIN INLET
- ES — PROPOSED END SECTION
- WQS — PROPOSED WATER QUALITY STRUCTURE
- OCS — PROPOSED OUTLET CONTROL STRUCTURE
- CO — PROPOSED CLEANOUT
- 15" HDPE — PROPOSED STORM DRAIN LINE & SIZE
- PROPOSED 6" PERFORATED PIPE
- PROPOSED SANITARY SEWER LINE
- PROPOSED WATER LINE
- PROPOSED RETAINING WALL (DESIGN BY OTHERS)
- RELOCATED LIGHT
- EXISTING FEATURE TO BE REMOVED

NOTES:

1. EXISTING CONDITIONS DEPICTED ON THIS PLAN HAVE BEEN TAKEN FROM SURVEY ENTITLED, "SITE DEVELOPMENT PLAN FOR EXPANSION," PREPARED BY JAY A. GREENWELL, PLS, LLC., DATED 08/04/2022.
2. UNLESS OTHERWISE SPECIFIED, PIPE FOR STORM DRAINS SHALL BE HIGH DENSITY POLYETHYLENE PIPE (HDPE) WITH A SMOOTH INTERIOR AND ANNULAR EXTERIOR CORRUGATIONS IN ACCORDANCE WITH ASTM F-2648. JOINTS SHALL BE WATERTIGHT IN ACCORDANCE WITH ASTM D-3212.
3. UNLESS OTHERWISE SPECIFIED, PIPE FOR SANITARY SEWER GRAVITY LINES SHALL BE POLYVINYL CHLORIDE PIPE (PVCP). SDR-35, WITH PUSH-ON JOINTS IN ACCORDANCE WITH ASTM D-3034 AND D-3212.
4. UNLESS OTHERWISE SPECIFIED, PIPE FOR WATER LINES SHALL BE DOUBLE CEMENT-LINED DUCTILE IRON PIPE (DIP). CLASS 52, WITH MECHANICAL JOINTS IN ACCORDANCE WITH AWWA C-150, C-151, C-104 AND C-111.
5. ELECTRIC, TELEPHONE, FIRE ALARM AND CABLE TELEVISION LINES SHALL BE INSTALLED UNDERGROUND IN CONDUIT IN ACCORDANCE WITH THE REQUIREMENTS OF THE UTILITY COMPANY HAVING JURISDICTION.
6. EXISTING STORM DRAINS TO REMAIN SHALL BE PROTECTED DURING CONSTRUCTION.
7. ADDITIONAL CERTIFICATION, BY AN APPROPRIATE LICENSED OR CERTIFIED DESIGN PROFESSIONAL SHALL BE REQUIRED FOR ALL MATTERS BEFORE THE PLANNING BOARD INDICATING THAT THE DRAWINGS AND PROJECT ARE IN COMPLIANCE WITH THE STORMWATER MANAGEMENT PHASE II REGULATIONS.

No.	Revision	Date	By

Previous Editions Obsolete

APPLICANT/OWNER:
RAMLAND HOLDINGS, LLC
96 FRENEAU AVENUE
MATAWAN, NEW JERSEY 07747

ARCHITECT:
MICHELLE DROLETTE ARCHITECT, LLC
129 EAST HIGH STREET
HELLERTOWN, PA 18055

JMC Planning, Engineering, Landscape Architecture & Land Surveying, PLLC
JMC Site Development Consultants, LLC
John Meyer Consulting, Inc.
120 BEDFORD ROAD • ARMONK, NY 10504
voice 914.273.5225 • fax 914.273.2102
www.jmcpllc.com

UTILITIES PLAN

DATA CENTER BUILDING EXPANSION

1 RAMLAND ROAD
TOWN OF ORANGETOWN, NEW YORK

ANY ALTERATION OF PLANS, SPECIFICATIONS, PLATS AND REPORTS BEARING THE SEAL OF A LICENSED PROFESSIONAL ENGINEER OR LICENSED LAND SURVEYOR IS A VIOLATION OF ARTICLE 145 OF THE NEW YORK STATE EDUCATION LAW, EXCEPT AS PROVIDED FOR BY SECTION 7209, SUBSECTION 2.

Drawn:	BD	Approved:	RR
Scale:	1" = 40'		
Date:	10/18/2022		
Project No:	13016		
13016-UTILITIES	UTILITIES	UTIL.scr	
Drawing No:	C-300		

NOT FOR CONSTRUCTION

COPYRIGHT © 2019 by JMC All rights reserved. No part of this document may be copied, stored in a retrieval system, or transmitted in any form or by means, electronic, mechanical, photocopying, recording or otherwise, without the prior written permission of JMC PLANNING, ENGINEERING, LANDSCAPE ARCHITECTURE & LAND SURVEYING, PLLC, JMC SITE DEVELOPMENT CONSULTANTS, LLC, JOHN MEYER CONSULTING, INC. (HEREINAFTER COLLECTIVELY "JMC").

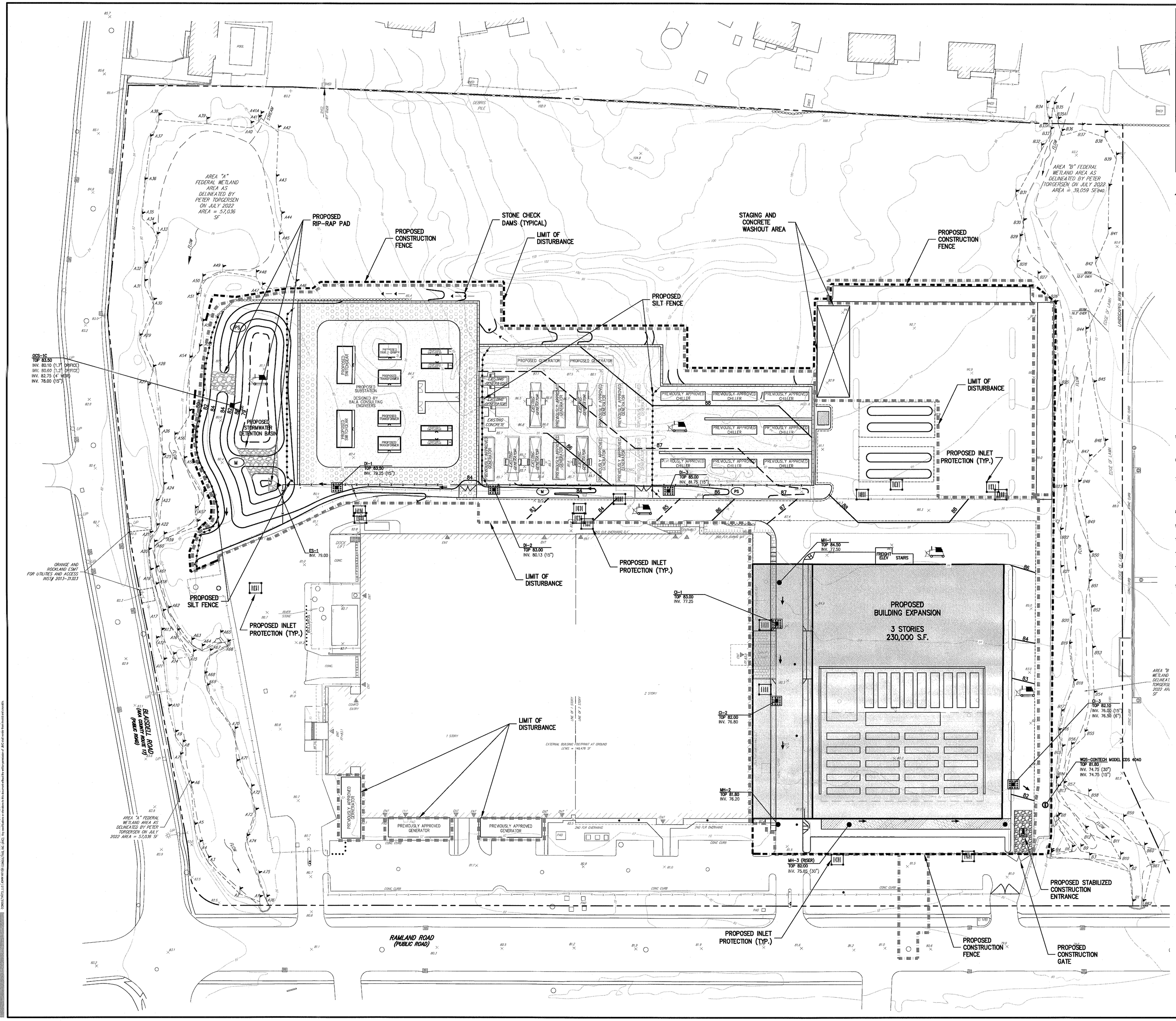

LEGEND

- PROPOSED SILT SACK INLET PROTECTION
- PROPOSED STONE AND BLOCK INLET PROTECTION
- PROPOSED LAND GRADING
- PROPOSED PERMANENT SEEDING
- PROPOSED MULCHING
- PROPOSED CONSTRUCTION FENCE
- PROPOSED SILT FENCE
- PROPOSED LIMIT OF DISTURBANCE
- PROPOSED STABILIZED CONSTRUCTION ENTRANCE
- STONE CHECK DAM

NOTES:

1. EXISTING CONDITIONS DEPICTED ON THIS PLAN HAVE BEEN TAKEN FROM SURVEY ENTITLED, "SITE DEVELOPMENT PLAN FOR EXPANSION," PREPARED BY JAY A. GREENWELL, PLS, LLC., DATED 08/04/2022.
2. ALL EROSION AND SEDIMENT CONTROL MEASURES SHALL BE INSTALLED AND MAINTAINED IN ACCORDANCE WITH ALL THE PLANS, PRIOR TO BEGINNING ANY CLEARING, GRUBBING OR EXCAVATION.
3. THE TREE PROTECTION AND PRESERVATION GUIDELINES ADOPTED PURSUANT TO SECTION 21-24 OF THE LAND DEVELOPMENT REGULATIONS OF THE TOWN OF ORANGETOWN WILL BE IMPLEMENTED IN ORDER TO PROTECT AND PRESERVE BOTH INDIVIDUAL SPECIMEN TREES AND BUFFER AREAS WITH MANY TREES. STEPS THAT WILL BE TAKEN TO RESERVE AND PROTECT EXISTING TREES TO REMAIN ARE AS FOLLOWS:
   a. NO CONSTRUCTION EQUIPMENT SHALL BE PARKED UNDER THE TREE CANOPY.
   b. THERE WILL BE NO EXCAVATION OR STOCKPILING OF EARTH UNDERNEATH THE TREES.
   c. TREES DESIGNATED TO BE PRESERVED SHALL BE MARKED CONSPICUOUSLY ON ALL SIDES AT A 5 TO 10 FOOT HEIGHT.
   d. THE TREE PROTECTION ZONE FOR TREES DESIGNATED TO BE PRESERVED WILL BE ESTABLISHED BY ONE OF THE FOLLOWING METHODS:
      -ONE (1) FOOT RADIUS FROM THE TRUNK PER INCH DBH
      -DRIP LINE OF THE TREE CANOPY
      THE METHOD CHOSEN SHOULD BE BASED ON PROVIDING THE MAXIMUM PROTECTION ZONE POSSIBLE. A BARRIER OF SNOW FENCE OR APPROVED EQUAL IS TO BE PLACED AND MAINTAINED ONE YARD BEYOND THE ESTABLISHED TREE PROTECTION. IF IT IS AGREED THAT THE TREE PROTECTION ZONE OF A SELECTED TREE MUST BE VIOLATED, ONE OF THE FOLLOWING METHODS MUST BE EMPLOYED TO MITIGATE THE IMPACT:
      -LIGHT TO HEAVY IMPACTS: MINIMUM OF EIGHT INCHES OF WOOD CHIPS INSTALLED IN THE AREA TO BE PROTECTED. CHIPS SHALL BE REMOVED UPON COMPLETION OF WORK.
      -LIGHT IMPACTS ONLY: INSTALLATION OF $\frac{3}{4}$ INCH OF PLYWOOD BOARDS OVER THE AREA TO BE PROTECTED.
      THE BUILDER OR ITS AGENT MAY NOT CHANGE GRADE WITHIN THE TREE PROTECTION ZONE OF A PRESERVED TREE UNLESS SUCH GRADE CHANGE HAS RECEIVED FINAL APPROVAL FROM THE PLANNING BOARD. IF THE GRADE LEVEL IS TO BE CHANGED MORE THAN SIX (6) INCHES, TREES DESIGNATED TO BE PRESERVED SHALL BE WELLED AND/OR PRESERVED IN A RAISED BED, WITH THE TREE WELL A RADIUS OF THREE (3) FEET LARGER THAN THE TREE CANOPY.
4. EXPOSED SLOPES AND ALL GRADED AREAS SHALL BE SEEDED WITH THE FOLLOWING GRASS MIX IMMEDIATELY UPON COMPLETION OF ITS CONSTRUCTION AT A RATE OF 9 POUNDS PER 1000 S.F. IN THE FOLLOWING PROPORTIONS:
   CREEPING RED FESCUE 30 %
   PERENNIAL RYE GRASS 70 %
5. GRASS SEED MIX FOR EROSION AND SEDIMENT CONTROL MAY BE APPLIED BY EITHER MECHANICAL OR HYDROSEEDING METHODS. HYDROSEEDING SHALL BE PERFORMED IN ACCORDANCE WITH THE AMERICAN ASSOCIATION OF NURSERYMEN, AMERICAN STANDARD FOR NURSERY STOCK, LATEST EDITION.
6. SEEDED AREAS SHALL BE MULCHED WITH STRAW AT A RATE OF 2 TONS PER ACRE (90 LBS. PER 1,000 S.F.)SUCH THAT THE MULCH FORMS A CONTINUOUS BLANKET.
7. EROSION AND SEDIMENT CONTROL MEASURES SHALL BE INSPECTED AND MAINTAINED ON A DAILY BASIS BY THE CONTRACTOR. ALL COLLECTED SEDIMENT WITHIN SEDIMENT BARRIERS SHALL BE REMOVED PERIODICALLY TO MAINTAIN THE FUNCTION OF THE SEDIMENT BARRIER. ALL SEDIMENT COLLECTED SHALL BE RESPREAD ON-SITE WITHIN STABILIZED AREAS AS DIRECTED BY THE OWNERS FIELD REPRESENTATIVE.
8. DUST SHALL BE CONTROLLED BY SPRINKLING OR OTHER APPROVED METHODS AS NECESSARY, OR AS DIRECTED BY THE TOWN ENGINEER.
9. CUT AND FILLS SHALL NOT ENDANGER ADJOINING PROPERTIES, NOR DIVERT WATER ONTO THE PROPERTY OF OTHERS.
10. ALL FILLS SHALL BE COMPACTED TO PROVIDE STABILITY OF MATERIAL AND TO PREVENT SETTLEMENT.
11. THE CONTRACTOR SHALL INSPECT DOWNSTREAM CONDITIONS FOR EVIDENCE OF SEDIMENTATION ON A WEEKLY BASIS AND AFTER RAINSTORMS.
12. AS WARRANTED BY FIELD CONDITIONS, SPECIAL ADDITIONAL EROSION AND SEDIMENT CONTROL MEASURES SHALL BE INSTALLED BY THE CONTRACTOR AS REQUIRED.
13. STOCKPILING OF CONSTRUCTION MATERIAL SHALL BE PLACED ON-SITE IN THE AREA DESIGNATED. STOCKPILED EXCAVATED MATERIAL SHALL HAVE SILT FENCE LOCATED AROUND PERIMETER. ALL STOCKPILED MATERIAL SHALL BE MAINTAINED IN AN ORDERLY MANNER SO AS NOT TO IMPEDE ON EXISTING TRAFFIC CIRCULATION ROUTES.
14. AT LEAST ONE WEEK PRIOR TO THE COMMENCEMENT OF ANY WORK, INCLUDING THE INSTALLATION OF EROSION CONTROL DEVICES OR THE REMOVAL OF TREES AND VEGETATION, A PRE-CONSTRUCTION MEETING MUST BE HELD WITH THE TOWN OF ORANGETOWN DEPARTMENT OF ENVIRONMENTAL MANAGEMENT AND ENGINEERING, SUPERINTENDENT OF HIGHWAYS AND THE OFFICE OF BUILDING, ZONING AND PLANNING ADMINISTRATION AND ENFORCEMENT. IT IS THE RESPONSIBILITY AND THE OBLIGATION OF THE PROPERTY OWNER TO ARRANGE SUCH A MEETING.

No.	Revision	Date	By

Previous Editions Obsolete

APPLICANT/OWNER:
RAMLAND HOLDINGS, LLC
96 FRENEAU AVENUE
MATAWAN, NEW JERSEY 07747

ARCHITECT:
MICHELLE DROLETTE ARCHITECT, LLC
129 EAST HIGH STREET
HELLERTOWN, PA 18055

JMC Planning, Engineering, Landscape Architecture & Land Surveying, PLLC
JMC Site Development Consultants, LLC
John Meyer Consulting, Inc.
120 BEDFORD ROAD • ARMONK, NY 10504
voice 914.273.5225 • fax 914.273.2102
www.jmcpllc.com

EROSION AND SEDIMENT CONTROL PLAN

DATA CENTER BUILDING EXPANSION

1 RAMLAND ROAD
TOWN OF ORANGETOWN, NEW YORK

ANY ALTERATION OF PLANS, SPECIFICATIONS, PLATS AND REPORTS BEARING THE SEAL OF A LICENSED PROFESSIONAL ENGINEER OR LICENSED LAND SURVEYOR IS A VIOLATION OF ARTICLE 145 OF THE NEW YORK STATE EDUCATION LAW, EXCEPT AS PROVIDED FOR BY SECTION 7209, SUBSECTION 2.

Drawn:	BD	Approved:	RR
Scale:	1" = 40'		
Date:	10/18/2022		
Project No:	13016		
13016-SAE	SE	SE.scr	
Drawing No:	C-400		

COPYRIGHT © 2017 by JMC All Rights Reserved. Such drawings and documents are and shall remain the property of JMC and shall not be reproduced in whole or in part without our written consent. Such drawings and documents are not to be used on other projects and are to be returned to JMC upon request.

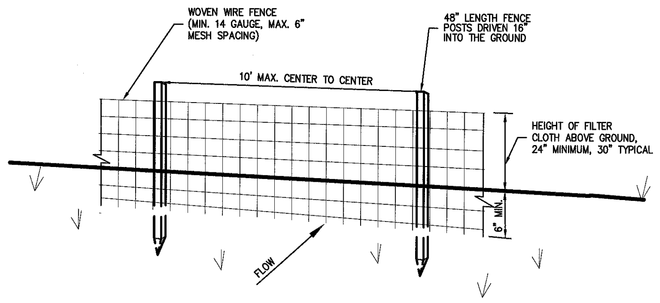

PERSPECTIVE VIEW

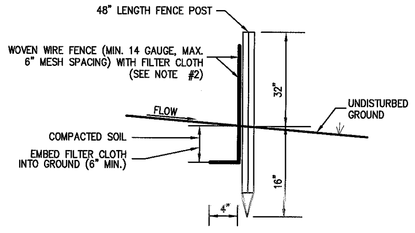

SECTION

SLOPE	STEEPNESS	SLOPE LENGTH/FENCE LENGTH (FT.)
2-10%	50:1 TO 10:1	250/2000
10-20%	10:1 TO 5:1	150/1000
20-33%	5:1 TO 3:1	80/750
33-50%	3:1 TO 2:1	70/350
>50%	>2:1	30/175

*ALL SILT FENCES SHALL BE PLACED AS CLOSE TO THE DISTURBED AREA AS POSSIBLE, BUT AT LEAST 10 FEET FROM THE TOE OF A SLOPE STEEPER THAN 3H:1V, TO ALLOW FOR MAINTENANCE AND ROLL DOWN. THE AREA BEYOND THE FENCE MUST BE UNDISTURBED OR STABILIZED.

NOTES:

1. WOVEN WIRE FENCE SHALL BE FASTENED SECURELY TO FENCE POSTS WITH WIRE TIES OR STAPLES. POSTS SHALL BE STEEL, EITHER T OR U TYPE OR HARDWOOD.
2. FILTER CLOTH SHALL BE FASTENED SECURELY TO WOVEN WIRE FENCE WITH TIES SPACED EVERY 24" AT TOP AND MID SECTION. FENCE SHALL BE WOVEN WIRE, 6" MAXIMUM MESH OPENING.
3. WHEN TWO SECTIONS OF FILTER CLOTH ADJOIN EACH OTHER, THEY SHALL BE OVERLAPPED BY SIX INCHES AND FOLDED. FILTER CLOTH SHALL BE EITHER FILTER X, MIRAFI 100X, STABLINKA T140N, OR APPROVED EQUAL.
4. PREFABRICATED UNITS SHALL BE GEOFAB, ENVIROFENCE, OR APPROVED EQUAL.
5. MAINTENANCE SHALL BE PERFORMED AS NEEDED AND MATERIAL REMOVED AND REPLACED WHEN "BULGES" DEVELOP IN THE SILT FENCE.

SILT FENCE — 1

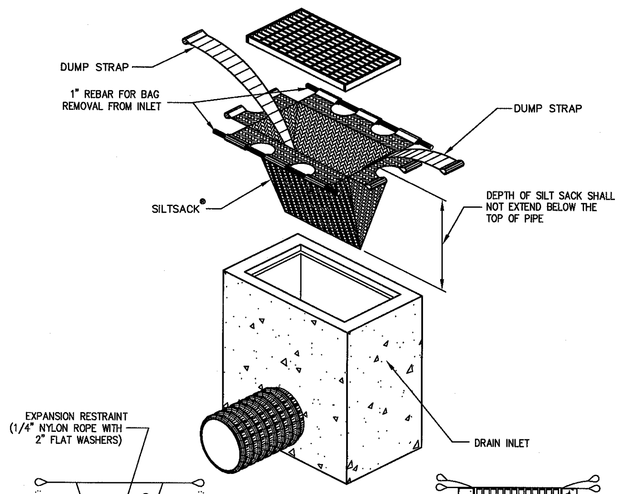

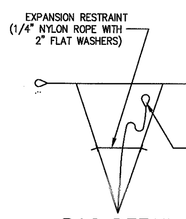

BAG DETAIL

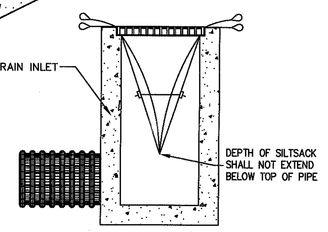

INSTALLATION DETAIL

HI-FLOW SILT SACK AS MANUFACTURED BY ACF ENVIRONMENTAL OR APPROVED EQUAL®

(FOR AREAS OF MODERATE TO HEAVY PRECIPITATION AND RUN-OFF)

PROPERTIES	TEST METHOD	UNITS
GRAB TENSILE STRENGTH	ASTM D-4632	265 LBS
GRAB TENSILE ELONGATION	ASTM D-4632	20 %
PUNCTURE	ASTM D-4833	135 LBS
MULLEN BURST	ASTM D-3786	420 PSI
TRAPEZOID TEAR	ASTM D-4533	45 LBS
UV RESISTANCE	ASTM D-4355	90 %
APPARENT OPENING SIZE	ASTM D-4751	20 US SIEVE
FLOW RATE	ASTM D-4491	200 GAL/MIN/SQ FT
PERMITTIVITY	ASTM D-4491	1.5 SEC -1

NOTE:
CURB INLETS SHALL BE TYPE B WITH CURB DEFLECTOR.

MANUFACTURED INSERT INLET PROTECTION — 2

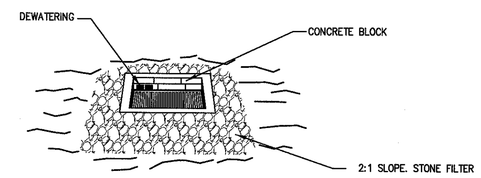

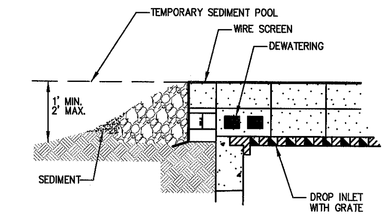

STONE & BLOCK DETAIL

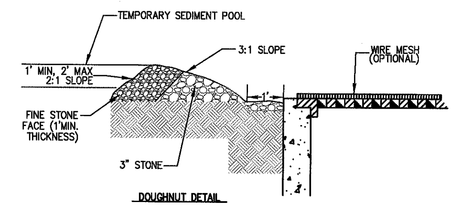

DOUGHNUT DETAIL

NOTES:

1. LAY ONE BLOCK ON EACH SIDE OF THE STRUCTURE ON ITS SIDE FOR DEWATERING. FOUNDATION SHALL BE 2 INCHES MINIMUM BELOW REST OF INLET AND BLOCKS SHALL BE PLACED AGAINST INLET FOR SUPPORT.
2. HARDWARE CLOTH OR 1/2" WIRE MESH SHALL BE PLACED OVER BLOCK OPENINGS TO SUPPORT STONE.
3. USE CLEAN STONE 1/2" TO 3/4" IN DIAMETER PLACED 2" BELOW THE TOP OF THE BLOCK ON A 2:1 SLOPE OR FLATTER.
4. FOR STONE STRUCTURES ONLY. A 1 FOOT THICK LAYER OF THE FILTER STONE WILL BE PLACED AGAINST THE 3" STONE AS SHOWN ON THE DRAWINGS.

STONE & BLOCK DROP INLET PROTECTION — 3

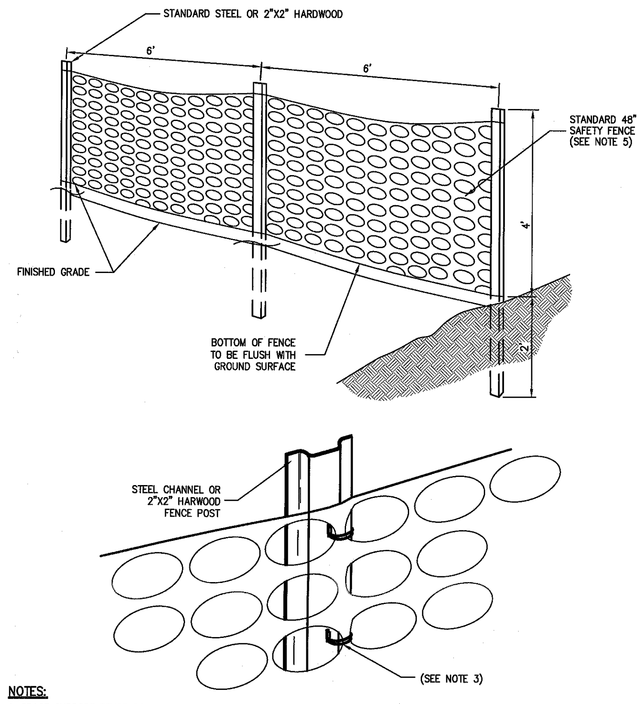

NOTES:

1. SPACE SUPPORT FENCE POSTS AT 6 FOOT INTERVALS.
2. DRIVE SUPPORT POSTS 2 FEET INTO GROUND.
3. FIRMLY FASTEN FENCE MATERIAL IN PLACE BY WIRING TO FENCE POST WHILE MAINTAINING TENSION ACROSS FULL HEIGHT OF FENCE. WIRING SHALL BE DONE IN A MANNER THAT WILL PREVENT SAGGING OF FENCE MATERIAL.
4. PROVIDE PERIODIC INSPECTION AND MAINTENANCE OF FENCE INCLUDING REPAIRS AS NECESSARY AND REQUIRED.
5. PLASTIC FENCE SHALL BE INTERNATIONAL ORANGE COLOR, AS MANUFACTURED BY ADPI ENTERPRISES, INC. OR APPROVED EQUAL.
6. REMOVE CONSTRUCTION FENCE AS DIRECTED BY THE OWNER'S FIELD REPRESENTATIVE.

CONSTRUCTION FENCE — 4

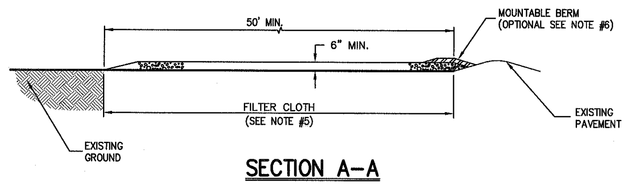

SECTION A-A

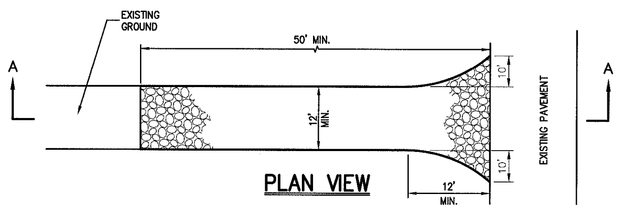

PLAN VIEW

NOTES

1. STONE SIZE – USE 1" TO 4" STONE, OR RECLAIMED OR RECYCLED CONCRETE EQUIVALENT.
2. LENGTH – AS REQUIRED, BUT NOT LESS THAN 50 FEET.
3. THICKNESS – NOT LESS THAN SIX (6) INCHES.
4. WIDTH – 12 FOOT MINIMUM, BUT NOT LESS THAN THE FULL WIDTH AT POINTS WHERE INGRESS OR EGRESS OCCURS. 24 FOOT MINIMUM IF SINGLE ENTRANCE TO SITE.
5. FILTER CLOTH TO BE PLACED OVER THE ENTIRE WIDTH AND LENGTH OF AREA PRIOR TO PLACING OF STONE.
6. SURFACE WATER – ALL SURFACE WATER FLOWING OR DIVERTED TOWARD CONSTRUCTION ENTRANCES SHALL BE PIPED BENEATH THE ENTRANCE. IF PIPING IS IMPRACTICAL, A MOUNTABLE BERM WITH 5:1 SLOPES WILL BE PERMITTED.
7. MAINTENANCE – THE ENTRANCE SHALL BE MAINTAINED IN A CONDITION WHICH WILL PREVENT TRACKING OR FLOWING OF SEDIMENT ONTO PUBLIC RIGHTS-OF-WAY. THIS MAY REQUIRE PERIODIC TOP DRESSING WITH ADDITIONAL STONE AS CONDITIONS DEMAND AND REPAIR AND/OR CLEANOUT OF ANY MEASURE USED TO TRAP SEDIMENT. ALL SEDIMENT SPILLED, DROPPED, WASHED OR TRACKED ONTO PUBLIC RIGHTS-OF-WAY MUST BE REMOVED IMMEDIATELY.
8. WASHING – WHEELS SHALL BE CLEANED TO REMOVE SEDIMENT PRIOR TO ENTRANCE ONTO PUBLIC RIGHTS-OF-WAY. WHEN WASHING IS REQUIRED, IT SHALL BE DONE ON AN AREA STABILIZED WITH STONE AND WHICH DRAINS INTO AN APPROVED SEDIMENT TRAPPING DEVICE.
9. PERIODIC INSPECTION AND NEEDED MAINTENANCE SHALL BE PROVIDED AFTER EACH RAIN.

STABILIZED CONSTRUCTION ENTRANCE — 5

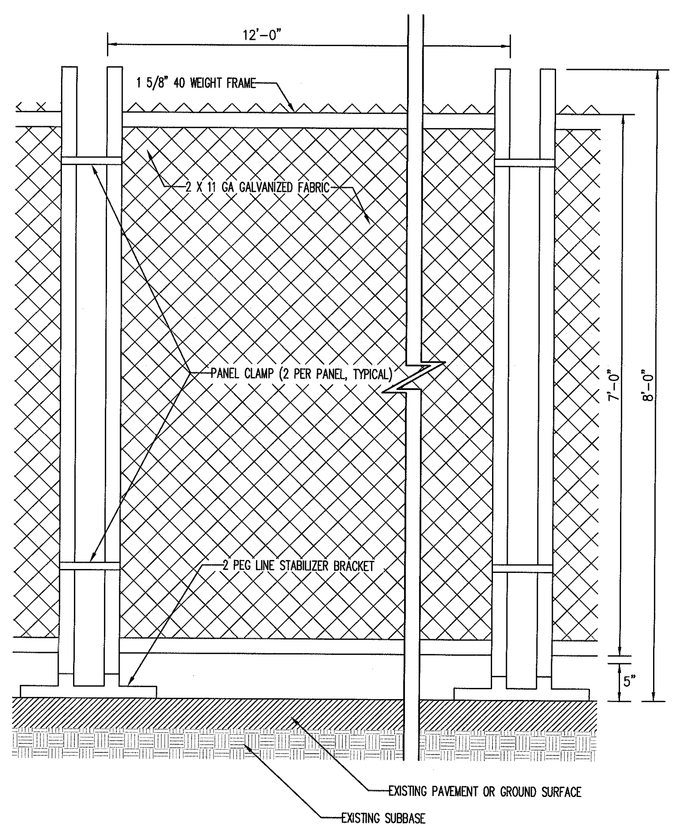

NOTE:
STABILIZED BRACKET TO BE HOT DIPPED GALVANIZED STEEL PIPE.

TEMPORARY CHAIN LINK CONSTRUCTION FENCE — 6

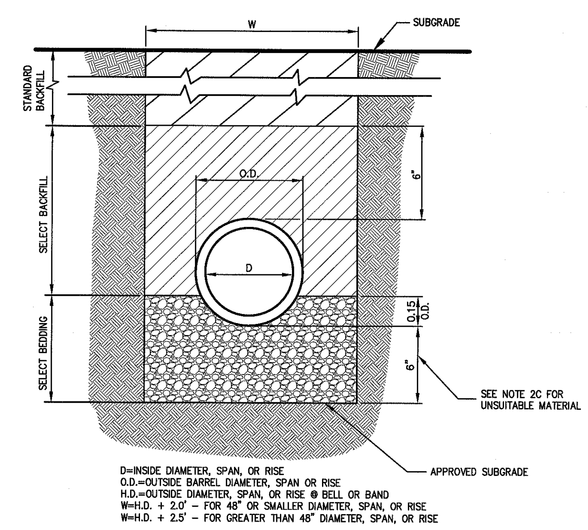

D=INSIDE DIAMETER, SPAN, OR RISE
O.D.=OUTSIDE BARREL DIAMETER, SPAN OR RISE
H.D.=OUTSIDE DIAMETER, SPAN, OR RISE @ BELL OR BAND
W=H.D. + 2.0' – FOR 48" OR SMALLER DIAMETER, SPAN, OR RISE
W=H.D. + 2.5' – FOR GREATER THAN 48" DIAMETER, SPAN, OR RISE

NOTES:

1. FOR TYPE II TRENCH, MATERIAL FOR SELECT BEDDING AND SELECT BACKFILL SHALL BE:
   A. EITHER SAND OR CRUSHED STONE IF NO WATER IS ENCOUNTERED IN TRENCH.
   B. 3/4"CRUSHED STONE IF WATER IS ENCOUNTERED IN TRENCH.
2. TYPE II TRENCH SHALL BE USED IN ALL OF THE FOLLOWING CASES:
   A. FOR ALL CORRUGATED POLYETHYLENE DRAIN PIPE (CPDP) AND PVC PIPE AND CONDUIT INSTALLATION.
   B. WHEN ROCK OR HARDPAN IS ENCOUNTERED IN BOTTOM OF TRENCH.
   C. WHEN UNSUITABLE MATERIAL IS ENCOUNTERED IN BOTTOM OF TRENCH. IN SUCH CASE DEPTH OF UNDERCUTTING SHALL BE AS DIRECTED BY THE ENGINEER WITH 6" MINIMUM.
3. FOR ALL TRENCH EXCAVATION IN FILL AREAS, ALL EMBANKMENTS SHALL BE CONSTRUCTED TO A MINIMUM OF 2 FEET ABOVE THE OUTSIDE TOP (AT THE BELL) OF THE PIPE PRIOR TO BEGINNING ANY TRENCH EXCAVATION.
4. BACKFILL FOR PIPE AND CONDUIT SHALL BE PLACED EVENLY AND CAREFULLY AROUND AND OVER THE PIPE OR CONDUIT IN SIX (6) INCH MAXIMUM LAYERS. EACH LAYER SHALL BE THOROUGHLY AND CAREFULLY COMPACTED UNTIL TWELVE (12) INCHES OF COVER EXISTS OVER THE PIPE OR CONDUIT. THE REMAINDER OF THE BACKFILL MAY THEN BE PLACED AND COMPACTED IN A MAXIMUM OF TWELVE (12) INCH LAYERS. EACH LAYER SHALL BE COMPACTED BY APPROVED MECHANICAL TAMPING MACHINES. UNLESS OTHERWISE SPECIFIED BACKFILL SHALL BE COMPACTED TO NOT LESS THAN 92% MAXIMUM MODIFIED DENSITY IN ACCORDANCE WITH ASTM DESIGNATION D-1557 IN THE MANNER HEREIN DESCRIBED. BACKFILL SHALL PROCEED UP TO THE LINES AND GRADES AS SHOWN ON THE DRAWINGS.

TYPE II TRENCH — 7

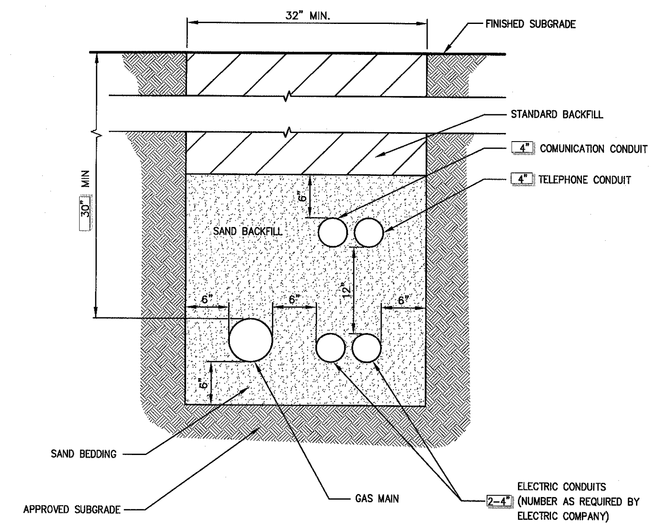

NOTES:

1. UTILITIES TO BE INSTALLED IN ACCORDANCE WITH THE REGULATIONS AND REQUIREMENTS OF THE UTILITY COMPANY HAVING JURISDICTION.
2. BACKFILL FOR PIPE AND CONDUIT SHALL BE PLACED EVENLY AND CAREFULLY AROUND AND OVER THE PIPE OR CONDUIT IN SIX (6) INCH MAXIMUM LAYERS. EACH LAYER SHALL BE THOROUGHLY AND CAREFULLY COMPACTED UNTIL TWELVE (12) INCHES OF COVER EXISTS OVER THE PIPE OR CONDUIT. THE REMAINDER OF THE BACKFILL MAY THEN BE PLACED AND COMPACTED IN A MAXIMUM OF TWELVE (12) INCH LAYERS. EACH LAYER SHALL BE COMPACTED BY APPROVED MECHANICAL TAMPING MACHINES. UNLESS OTHERWISE SPESIFIED BACKFILL SHALL BE COMPACTED TO NOT LESS THAN 92% MAXIMUM MODIFIED DENSITY IN ACCORDANCE WITH ASTM DESIGNATION D-1557 IN THE MANNER HEREIN DESCRIBED. BACKFILL SHALL PROCEED UP TO THE LINES AND GRADES AS SHOWN ON THE DRAWINGS.

UTILITY TRENCH DETAIL — 8

No.	Revision	Date	By

Previous Editions Obsolete

APPLICANT/OWNER:
RAMLAND HOLDINGS, LLC
96 FRENEAU AVENUE
MATAWAN, NEW JERSEY 07747

ARCHITECT:
MICHELLE DROLETTE ARCHITECT, LLC
129 EAST HIGH STREET
HELLERTOWN, PA 18055

JMC Planning, Engineering, Landscape Architecture & Land Surveying, PLLC
JMC Site Development Consultants, LLC
John Meyer Consulting, Inc.
120 BEDFORD ROAD • ARMONK, NY 10504
voice 914.273.5225 • fax 914.273.2102
www.jmcpllc.com

CONSTRUCTION DETAILS

DATA CENTER BUILDING EXPANSION

1 RAMLAND ROAD
TOWN OF ORANGETOWN, NEW YORK

ANY ALTERATION OF PLANS, SPECIFICATIONS, PLATS AND REPORTS BEARING THE SEAL OF A LICENSED PROFESSIONAL ENGINEER OR LICENSED LAND SURVEYOR IS A VIOLATION OF ARTICLE 145 OF THE NEW YORK STATE EDUCATION LAW, EXCEPT AS PROVIDED FOR BY SECTION 7209, SUBSECTION 2.

Drawn: BD	Approved: RR
Scale: NOT TO SCALE	
Date: 10/18/2022	
Project No: 13016	
13016-DETAILS-NEW	SHEET: -
Drawing No: C-900	

COPYRIGHT © 2013 by JMC All Rights Reserved. No part of this document may be reproduced, stored in a retrieval system, or transmitted in any form or by means, electronic, mechanical, photocopying, recording or otherwise, without the prior written permission of JMC PLANNING, ENGINEERING, LANDSCAPE ARCHITECTURE & LAND SURVEYING, PLLC | JMC SITE DEVELOPMENT CONSULTANTS, LLC | JOHN MEYER CONSULTING, INC. (JMC). USE OF THIS DOCUMENT IN WHOLE OR IN PART WITHOUT WRITTEN PERMISSION OF JMC IS PROHIBITED.

NOT FOR CONSTRUCTION

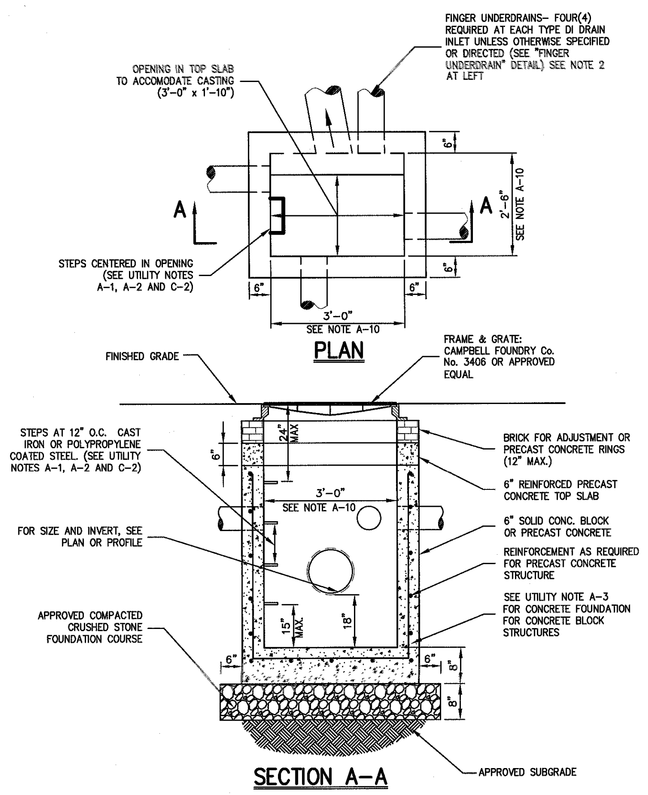

NOTE
1. REINFORCE PRECAST CONCRETE TOP SLAB AND REINFORCE PRECAST CONCRETE STRUCTURE SHALL BE DESIGNED TO ACCOMMODATE AN H–20 DESIGN LOAD.
2. LOCATIONS OF FINGER UNDERDRAINS MAY VARY FROM THAT AS SHOWN DEPENDING UPON NUMBER AND SIZE OF STORM DRAIN LINES ENTERING AND EXITING THE STRUCTURE.
3. SEE NOTES PERTAINING TO DRAIN INLETS UNDER UTILITY NOTES ON DRAWING #XX

DRAIN INLET (TYPE DI)
(with sump–with finger underdrains)

9

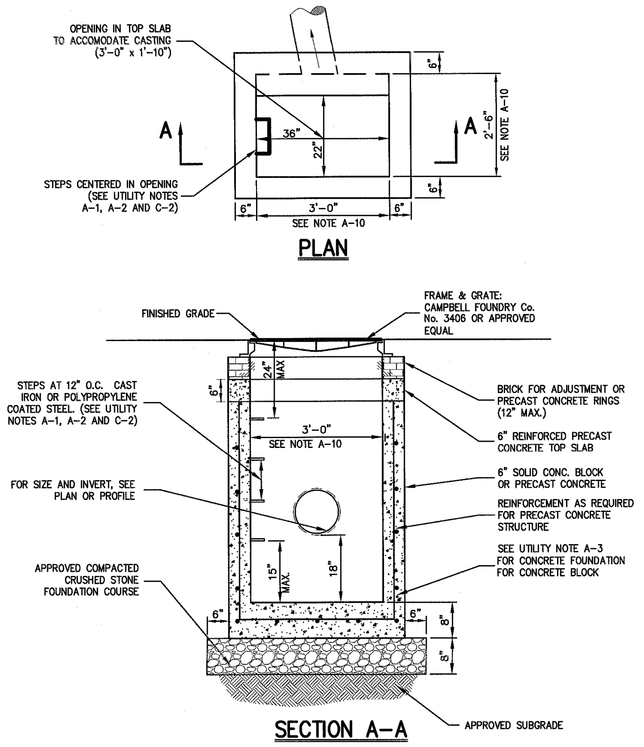

NOTE
1. REINFORCE PRECAST CONCRETE TOP SLAB AND REINFORCE PRECAST CONCRETE STRUCTURE SHALL BE DESIGNED TO ACCOMMODATE AN H–20 DESIGN LOAD.
2. SEE NOTES PERTAINING TO DRAIN INLETS UNDER UTILITY NOTES ON DRAWING #XX

DRAIN INLET (TYPE DI)
(with sump–w/∅ finger underdrains)

10

NOTES PERTAINING TO DRAIN INLETS

A–1 STEPS WILL NOT BE REQUIRED IN INLETS LESS THAN FOUR (4) FEET IN DEPTH. STEPS WILL BE REQUIRED IN INLETS FOUR (4) FEET OR GREATER IN DEPTH. DEPTHS FOR DRAIN INLETS SHALL BE MEASURED FROM FINISHED GRADE TO INSIDE BOTTOM OF STRUCTURE (INCLUDING SUMP AS APPLICABLE).

A–2 WHEN STEPS ARE REQUIRED, STEPS SHALL COMPLY WITH THE SAME REQUIREMENTS OF ASTM STANDARD C–478, ARTICLE 13 ENTITLED "MANHOLE STEPS & LADDERS".

A–3 FOR MASONRY STRUCTURES, THE FIRST COURSE OF MASONRY SHALL BE SET IN THE CONCRETE FOUNDATION BEFORE THE CONCRETE HAS SET. CONCRETE FOUNDATION SHALL BE CLASS "A"(4000 psi) CONCRETE, TWELVE (12) INCHES THICK AND SHALL EXTEND SIX (6) INCHES BEYOND THE OUTSIDE FACE THE STRUCTURE.

A–4 IT SHALL BE THE CONTRACTOR'S RESPONSIBILITY TO FURNISH AND CONSTRUCT THE PROPER SIZE STRUCTURE INCLUDING THE NECESSARY OPENINGS TO ACCOMMODATE THE WORK AS SHOWN ON THE PLANS OR ORDERED BY THE ENGINEER, AT NO ADDITIONAL COST TO THE OWNER.

A–5 ALL NECESSARY PATCHING FOR DRAIN STRUCTURES SHALL BE ACCOMPLISHED WITH NON–SHRINKING CEMENT MORTAR GROUT, APPROVED EQUAL TO SIKA–SET AS MANUFACTURED BY THE SIKA CHEMICAL CORP.

A–6 FOUNDATIONS FOR PRECAST CONCRETE STRUCTURES SHALL BE SET ON A COMPACTED LAYER OF APPROVED CRUSHED STONE HAVING A MINIMUM COMPACTED THICKNESS OF EIGHT (8) INCHES.

A–7 ALL PIPES SHALL BE CUT FLUSH WITH THE INSIDE WALL OF THE STRUCTURE.

A–8 PROVIDE REINFORCED CONCRETE TOP SLAB FOR OVERSIZED DRAIN INLETS WITH PROPER SIZE OPENING TO ACCOMMODATE INSTALLATION OF FRAME & GRATE.

A–9 FOR MASONRY STRUCTURES GREATER THAN TEN (10) FEET IN DEPTH, THICKNESS OF MASONRY WALLS SHALL BE INCREASED TO TWELVE (12) INCHES.

A–10 FOR ALL STRUCTURES GREATER THAN 10 FEET IN DEPTH, STRUCTURES SHALL PROVIDE MINIMUM INSIDE DIMENSIONS OF 4 FEET X 4 FEET.

NOTES PERTAINING TO MANHOLES

B–1 PRECAST CONCRETE MANHOLES SHALL COMPLY WITH ASTM STANDARD C–478. MANHOLE JOINTS SHALL COMPLY WITH ASTM STANDARD C–443.

B–2 FOR PRECAST CONCRETE MANHOLES FIVE (5) FEET OR LESS IN HEIGHT, TOP CONE SECTION SHALL BE REPLACED WITH PRECAST REINFORCED CONCRETE SLAB (6" MIN. THICKNESS) WITH OPENING OF SUFFICIENT SIZE TO ACCOMMODATE MANHOLE CASTING.

B–3 FOR MANHOLES 10 FEET OR MORE IN DEPTH, MANHOLE DIAMETER SHALL BE FIVE (5) FEET.

B–4 TERMINAL MANHOLE FLOORS SHALL BE SLOPED TOWARD OUTFALL PIPE.

B–5 INVERT CHANNELS FOR PRECAST CONCRETE MANHOLES SHALL BE CONSTRUCTED OF CONCRETE.

B–6 NOTES A–1, A–2, A–4, A–5, A–6 & A–7 UNDER "NOTES PERTAINING TO DRAIN INLETS" ABOVE SHALL APPLY TO MANHOLES.

NOTES PERTAINING TO PRECAST CONCRETE STRUCTURES FOR STORM DRAINS, SANITARY SEWERS AND WATER LINES

C–1 ALL PRECAST CONCRETE STRUCTURES SHALL BE DESIGNED TO ACCOMMODATE AN H–20 DESIGN LOAD.

C–2 STEPS SHALL BE LOCATED WITHIN STRUCTURE TO AVOID PLACEMENT OVER PIPES WHEN PRACTICABLE.

UTILITY NOTES

11

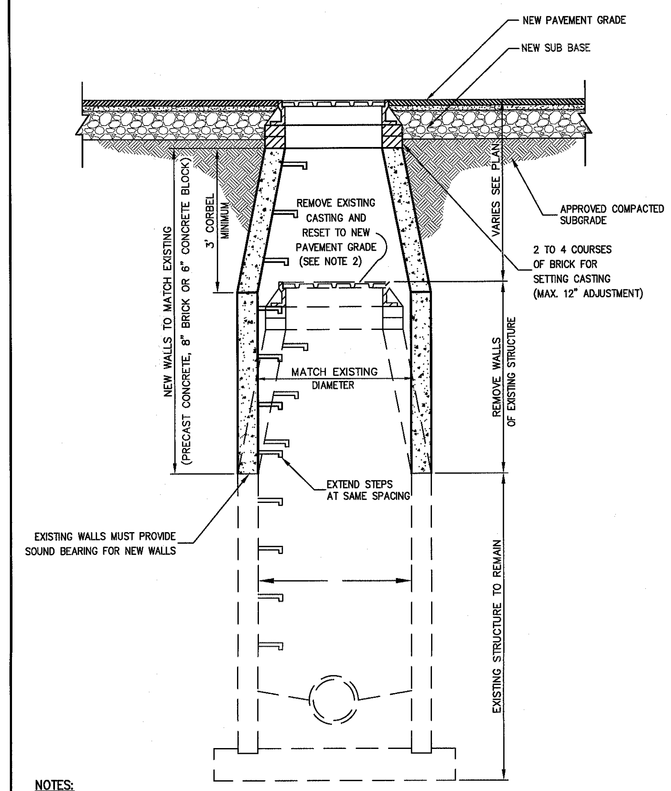

NOTES:
1. SEE "UTILITY NOTES" ON DRAWING SP–7 WHICH SHALL APPLY TO THIS DETAIL.
2. IF EXISTING CASTING IS UNFIT FOR RESETTING IN THE NEW CONSTRUCTION, AS DETERMINED BY THE OWNER'S FIELD REPRESENTATIVE, CONTRACTOR SHALL FURNISH AND SET NEW CASTING.

NOT FOR CONSTRUCTION

COPYRIGHT © 2013 By John Meyer Consulting
JMC Planning, Engineering, Landscape Architecture & Land Surveying, PLLC
JMC Site Development Consultants, LLC
John Meyer Consulting, Inc.
120 BEDFORD ROAD • ARMONK, NY 10504
voice 914.273.5225 • fax 914.273.2102
www.jmcpllc.com

EXISTING MANHOLE RECONSTRUCTED AND RAISED

12

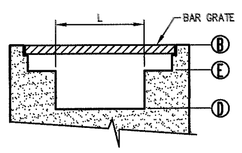

RECTANGULAR WEIR

ABBREVIATIONS

OCS	OUTLET CONTROL STRUCTURE
ELEV.	ELEVATION
IF	INFLOW
OF	OUTFLOW
NA	NOT APPLICABLE
O.C.	ON CENTER
T&B	TOP AND BOTTOM
EW	EACH WAY

STRUCTURE CHART

BASIN No.	STRUCTURE No.	ELEV GRATE (B)	PIPE/ORIFICE SIZE AND INVERT ELEVATION				WEIR			H	W
			PIPE OUTLET (F)	ORIFICE (A)	ORIFICE (C)	TYPE	BOTTOM ELEV. (D)	TOP ELEV. (E)	LENGTH (L)		
POND–1C	OCS–1C	83.50	15" @ 78.00	1.70" @ 80.10	1.20" @ 80.60	RECTANGULAR	82.75	83.25	4.70'	6.5	5.50'

NOTES:
1. PRECAST CONCRETE STRUCTURE SHALL BE DESIGNED TO ACCOMMODATE AN H–20 DESIGN LOAD
2. SEE UTILITY NOTES A–4 TO A–7

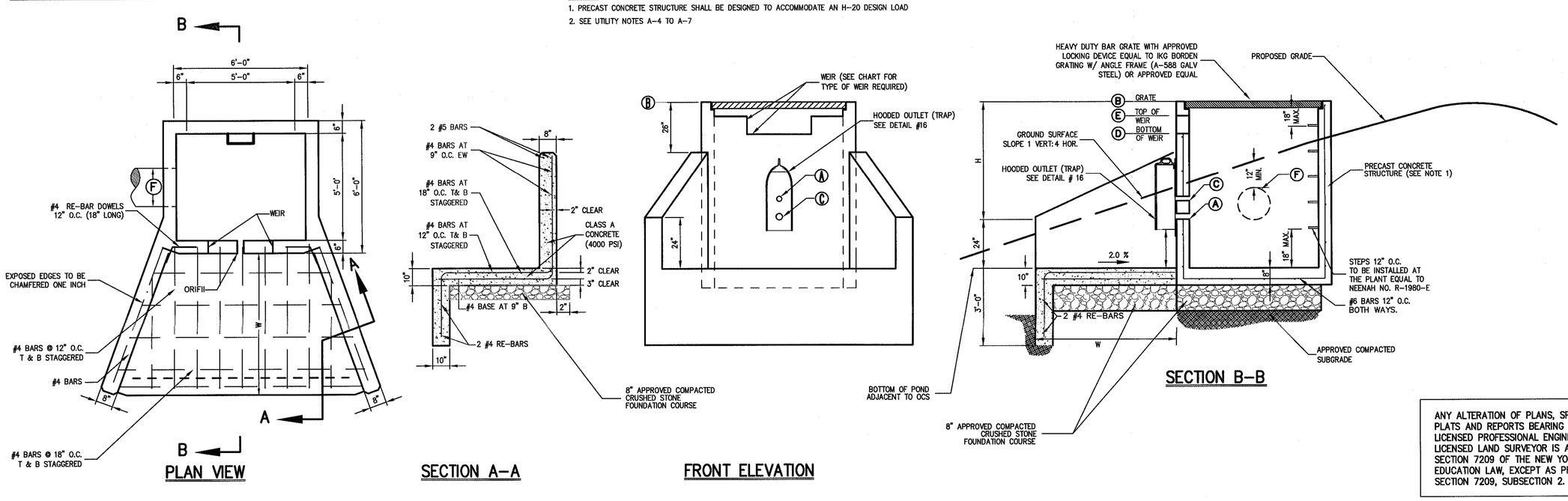

ANY ALTERATION OF PLANS, SPECIFICATIONS, PLATS AND REPORTS BEARING THE SEAL OF A LICENSED PROFESSIONAL ENGINEER OR LICENSED LAND SURVEYOR IS A VIOLATION OF SECTION 7209 OF THE NEW YORK STATE EDUCATION LAW, EXCEPT AS PROVIDED FOR BY SECTION 7209, SUBSECTION 2.

OUTLET CONTROL STRUCTURE
(Square)

13

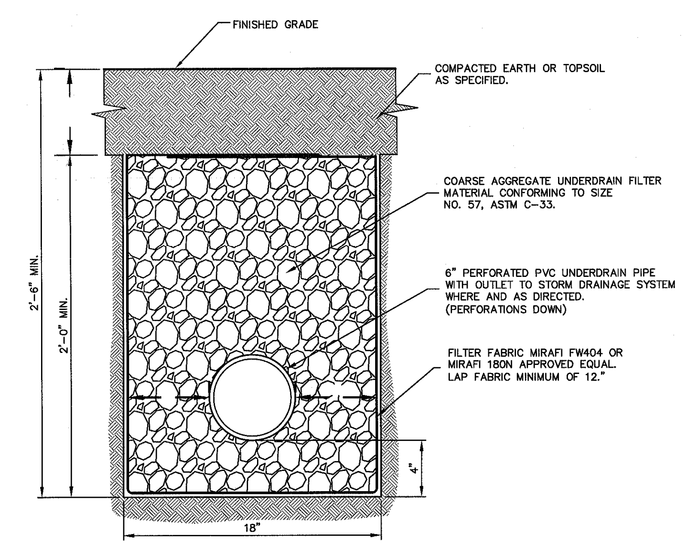

PIPE UNDERDRAIN

14

No.	Revision	Date	By

Previous Editions Obsolete

APPLICANT/OWNER:
RAMLAND HOLDINGS, LLC
96 FRENEAU AVENUE
MATAWAN, NEW JERSEY 07747

ARCHITECT:
MICHELLE DROLETTE ARCHITECT, LLC
129 EAST HIGH STREET
HELLERTOWN, PA 18055

CONSTRUCTION DETAILS

DATA CENTER BUILDING EXPANSION
1 RAMLAND ROAD
TOWN OF ORANGETOWN, NEW YORK

ANY ALTERATION OF PLANS, SPECIFICATIONS, PLATS AND REPORTS BEARING THE SEAL OF A LICENSED PROFESSIONAL ENGINEER OR LICENSED LAND SURVEYOR IS A VIOLATION OF ARTICLE 145 OF THE NEW YORK STATE EDUCATION LAW, EXCEPT AS PROVIDED FOR BY SECTION 7209, SUBSECTION 2.

Drawn:	BD	Approved:	RR
Scale:	NOT TO SCALE		
Date:	10/18/2022		
Project No:	13016		
13016–XCIMS–NEW	SHEET2		–
Drawing No:	C–901		

NOT FOR CONSTRUCTION!
COPYRIGHT © 2013 by JMC All Rights Reserved. No part of this document may be reproduced, stored in a retrieval system, or transmitted in any form or by means, electronic, mechanical, photocopying, recording or otherwise, without the prior written consent of JMC PLANNING, ENGINEERING, LANDSCAPE ARCHITECTURE & LAND SURVEYING, PLLC, JMC SITE DEVELOPMENT CONSULTANTS, LLC, OR JOHN MEYER CONSULTING, INC. It is a violation of law for any person, unless they are acting under the direction of a licensed professional engineer, to alter in any way an item bearing the seal of a professional engineer.

NOT FOR CONSTRUCTION
COPYRIGHT © 2013 by JMC All Rights Reserved. No part of this document may be reproduced, stored in a retrieval system, or transmitted in any form or by means, electronic, mechanical, photocopying, recording or otherwise, without the prior written permission of JMC PLANNING, ENGINEERING, LANDSCAPE ARCHITECTURE & LAND SURVEYING, PLLC | JMC SITE DEVELOPMENT CONSULTANTS, LLC | JOHN MEYER CONSULTING, INC. (JMC). Any modifications or alterations to this document without the written permission of JMC shall render them invalid and unusable.

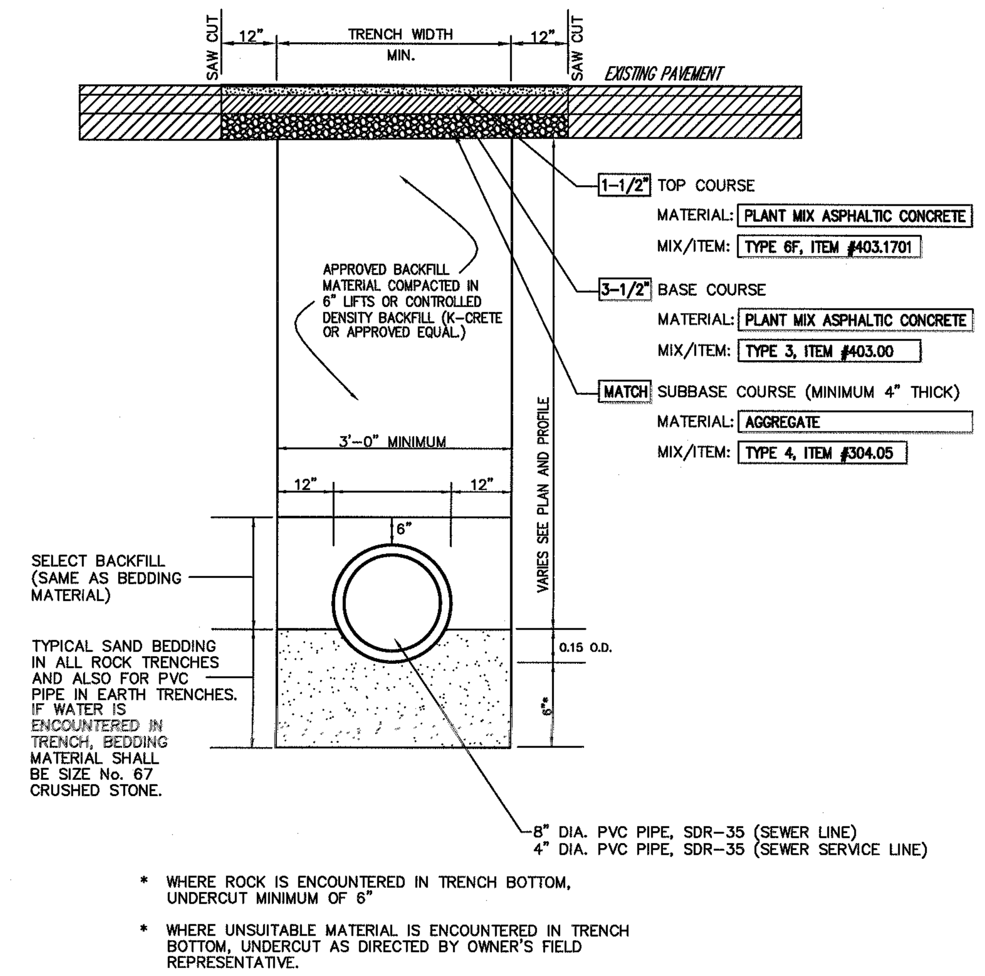

* WHERE ROCK IS ENCOUNTERED IN TRENCH BOTTOM, UNDERCUT MINIMUM OF 6"

* WHERE UNSUITABLE MATERIAL IS ENCOUNTERED IN TRENCH BOTTOM, UNDERCUT AS DIRECTED BY OWNER'S FIELD REPRESENTATIVE.

NOTES

1. THICKNESS INDICATED REFERS TO COMPACTED MEASURE.

TRENCH PAVEMENT REPLACEMENT 22

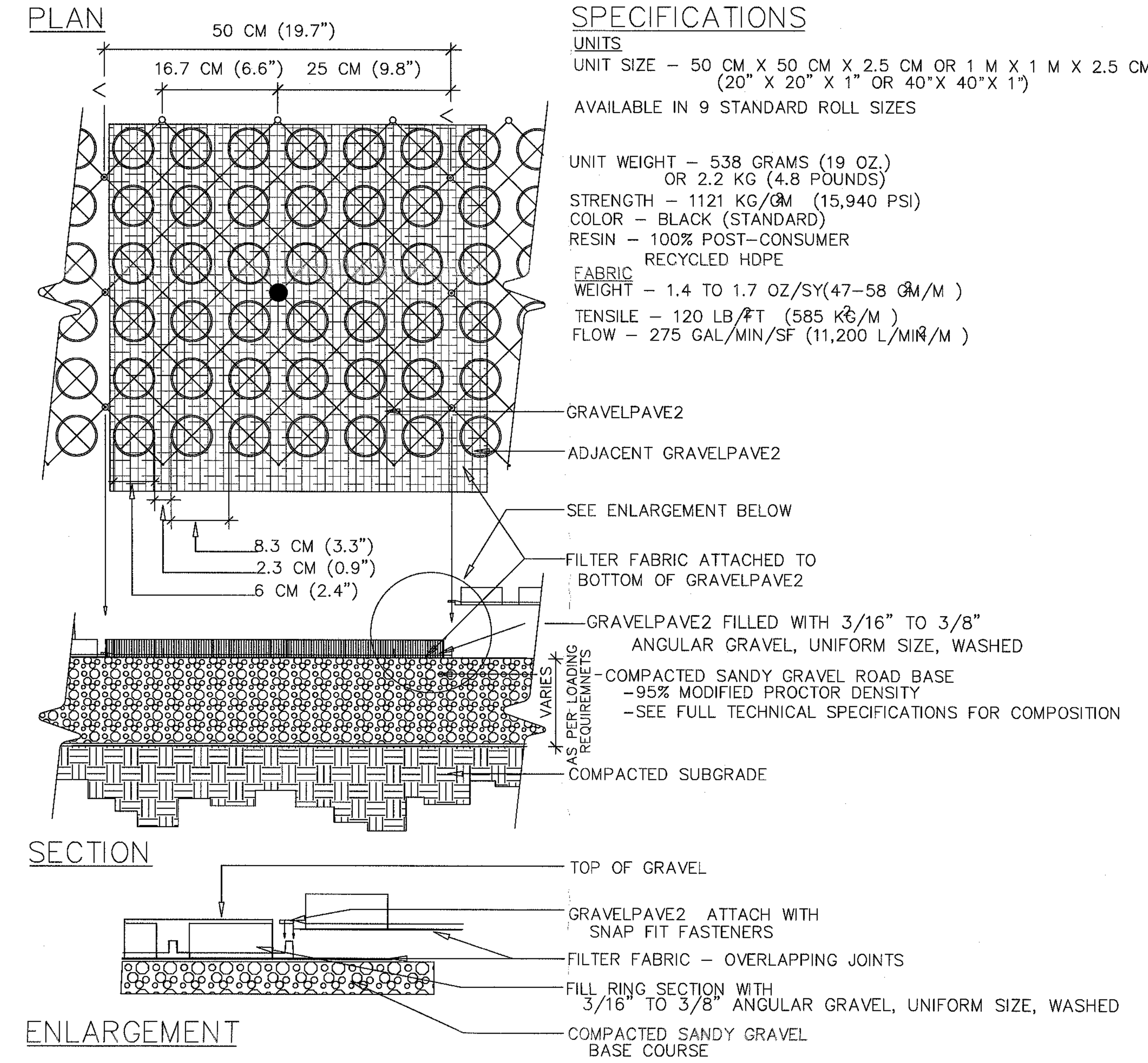

SPECIFICATIONS

UNITS
UNIT SIZE - 50 CM X 50 CM X 2.5 CM OR 1 M X 1 M X 2.5 CM
(20" X 20" X 1" OR 40"X 40"X 1")
AVAILABLE IN 9 STANDARD ROLL SIZES

UNIT WEIGHT - 538 GRAMS (19 OZ.)
OR 2.2 KG (4.8 POUNDS)
STRENGTH - 1121 KG/CM (15,940 PSI)
COLOR - BLACK (STANDARD)
RESIN - 100% POST-CONSUMER
RECYCLED HDPE

FABRIC
WEIGHT - 1.4 TO 1.7 OZ/SY(47-58 G/M)
TENSILE - 120 LB/FT (585 KG/M)
FLOW - 275 GAL/MIN/SF (11,200 L/MIN/M)

NOTES

1. INSTALL AS PER MANUFACTURES TECHNICAL SPECIFICATIONS AND INSTALLATION PROCEDURES.
2. GRAVEL PAVERS TO WITHSTAND HS-20 LOADING.

GRAVEL PAVE (GRAVELPAVE2) 23

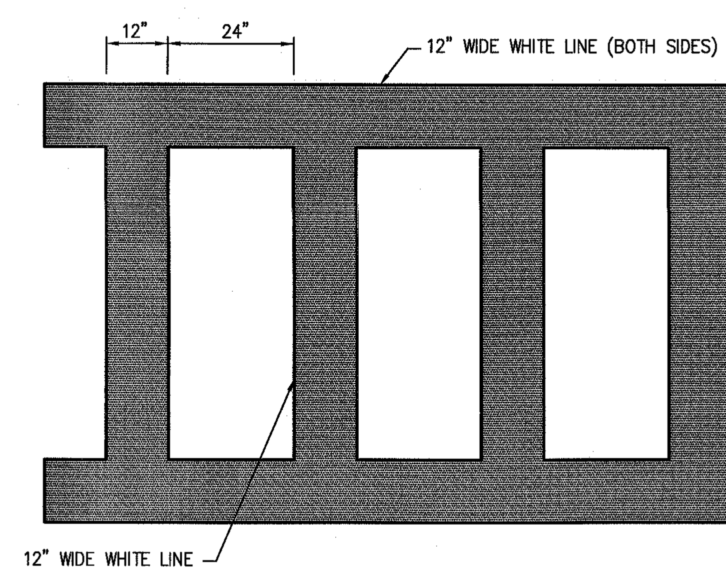

PEDESTRIAN CROSSING 24

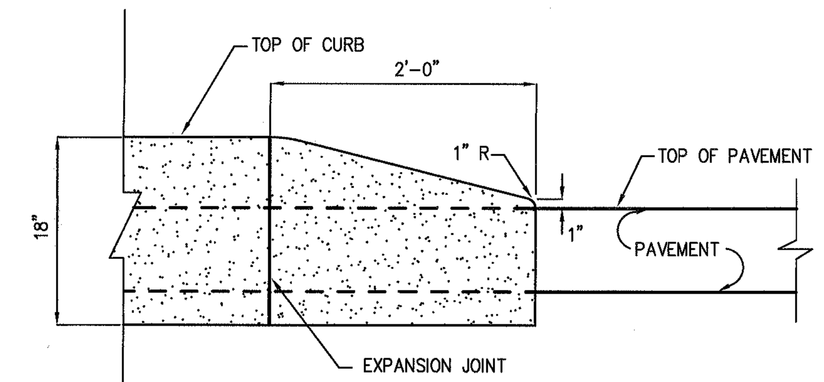

CONCRETE CURB ENDING 25

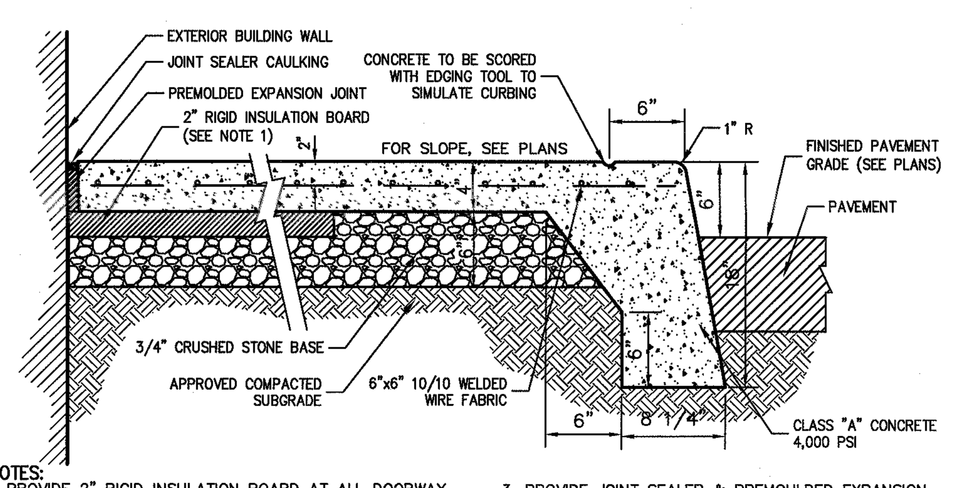

NOTES:

1. PROVIDE 2" RIGID INSULATION BOARD AT ALL DOORWAY OPENINGS AND EXTEND 8' MIN. IN ALL DIRECTIONS OR TO CONSTRUCTION/CONTRACTION JOINT, WHICHEVER IS GREATER.
2. JOINT SEALER CAULKING SHALL BE PSI-641 LOW MODULUS SILICONE SEALANT, BY POLYMERIC SYSTEMS INC. OR APPROVED EQUAL. PREMOULDED EXPANSION JOINT SHALL BE FLEXCELL OR APPROVED EQUAL.
3. PROVIDE JOINT SEALER & PREMOULDED EXPANSION JOINT AT ALL BLDG. WALLS, CONSTRUCTION JOINTS AND OTHER FIXED OBJECTS (HYDRANTS, LIGHT POLES, ETC.)
4. SIDEWALK SHALL HAVE LIGHT BROOM FINISH
5. SIDEWALK CROSS SLOPE SHALL BE 1% MIN. 2% MAX.
6. FOR SIDEWALK WIDTH SEE PLAN. SIDEWALK SHALL HAVE A 3' MIN. WIDTH CLEAR FROM BACK OF CURBING.

BUILDING PERIMETER MONOLITHIC CURB & SIDEWALK 26

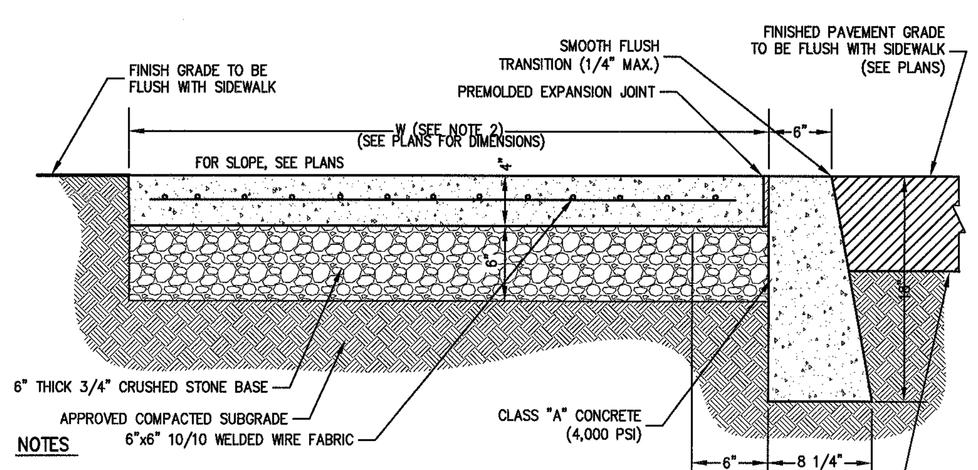

NOTES

1. SIDEWALK CROSS SLOPE SHALL BE 1% MIN. TO 2% MAX.
2. FOR SIDEWALK WIDTH SEE PLAN. SIDEWALK SHALL HAVE A 3' MIN. WIDTH CLEAR FROM BACK OF CURBING.
3. PROVIDE JOINT SEALER & PREMOULDED EXPANSION JOINT AT ALL BLDG. WALLS, CONSTRUCTION JOINTS AND OTHER FIXED OBJECTS (HYDRANTS, LIGHT POLES, ETC.)
4. SIDEWALK SHALL HAVE LIGHT BROOM FINISH.
5. PROVIDE 1/2" PREMOULDED EXPANSION JOINTS AT 20 FOOT INTERVALS UNLESS OTHERWISE DIRECTED.
6. REINFORCEMENT SHALL NOT EXTEND THROUGH EXPANSION JOINTS.

CONCRETE FLUSH CURB AND SIDEWALK 27

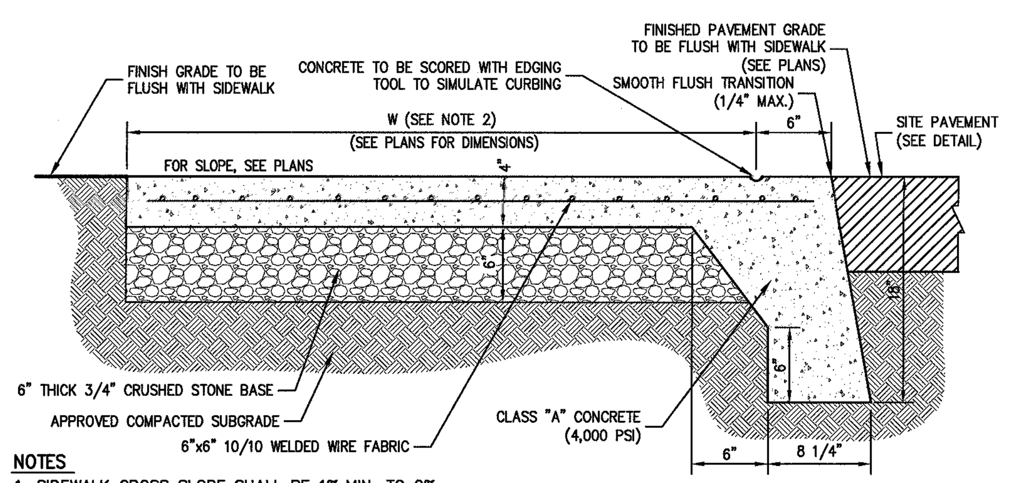

NOTES

1. SIDEWALK CROSS SLOPE SHALL BE 1% MIN. TO 2% MAX.
2. FOR SIDEWALK WIDTH SEE PLAN. SIDEWALK SHALL HAVE A 3' MIN. WIDTH CLEAR FROM BACK OF CURBING.
3. PROVIDE JOINT SEALER & PREMOULDED EXPANSION JOINT AT ALL BLDG. WALLS, CONSTRUCTION JOINTS AND OTHER FIXED OBJECTS (HYDRANTS, LIGHT POLES, ETC.)
4. SIDEWALK SHALL HAVE LIGHT BROOM FINISH.
5. PROVIDE 1/2" PREMOULDED EXPANSION JOINTS AT 20 FOOT INTERVALS UNLESS OTHERWISE DIRECTED.
6. REINFORCEMENT SHALL NOT EXTEND THROUGH EXPANSION JOINTS.

MONOLITHIC CONCRETE FLUSH CURB AND SIDEWALK 28

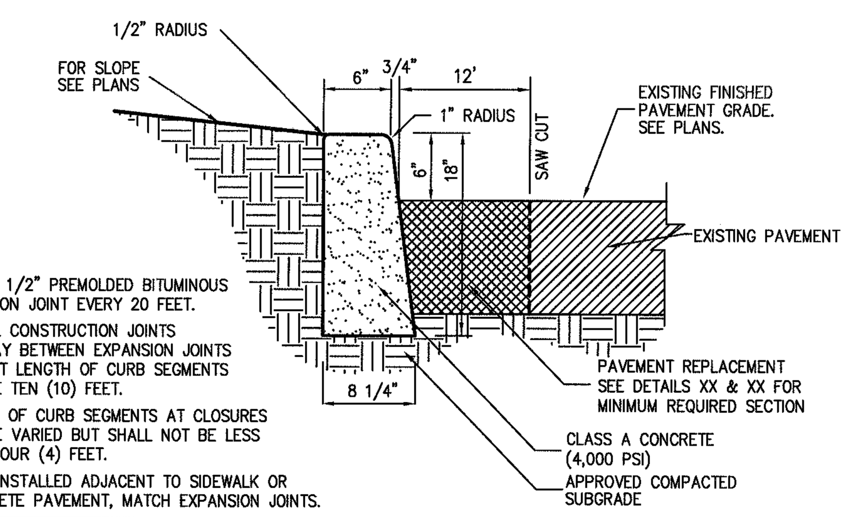

NOTES:

1. INSTALL 1/2" PREMOLDED BITUMINOUS EXPANSION JOINT EVERY 20 FEET.
2. INSTALL CONSTRUCTION JOINTS MID-WAY BETWEEN EXPANSION JOINTS SO THAT LENGTH OF CURB SEGMENTS WILL BE TEN (10) FEET.
3. LENGTH OF CURB SEGMENTS AT CLOSURES MAY BE VARIED BUT SHALL NOT BE LESS THAN FOUR (4) FEET.
4. WHEN INSTALLED ADJACENT TO SIDEWALK OR CONCRETE PAVEMENT, MATCH EXPANSION JOINTS.

CAST-IN-PLACE CONCRETE CURB (IN EXISTING PAVEMENT) 29

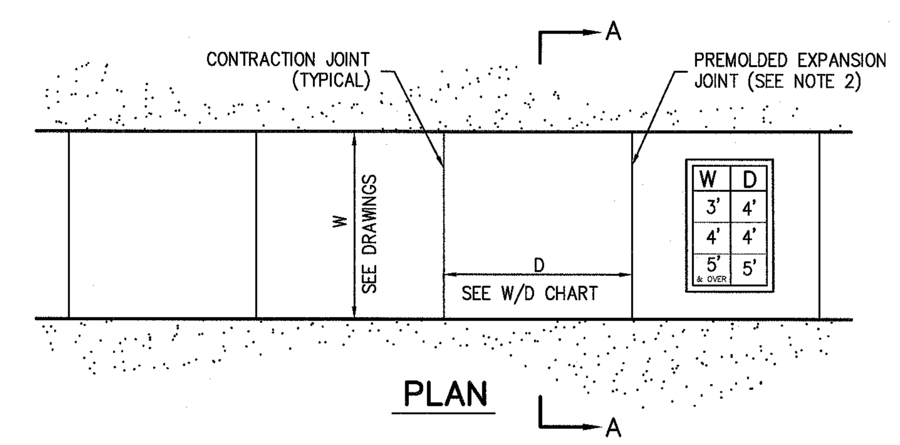

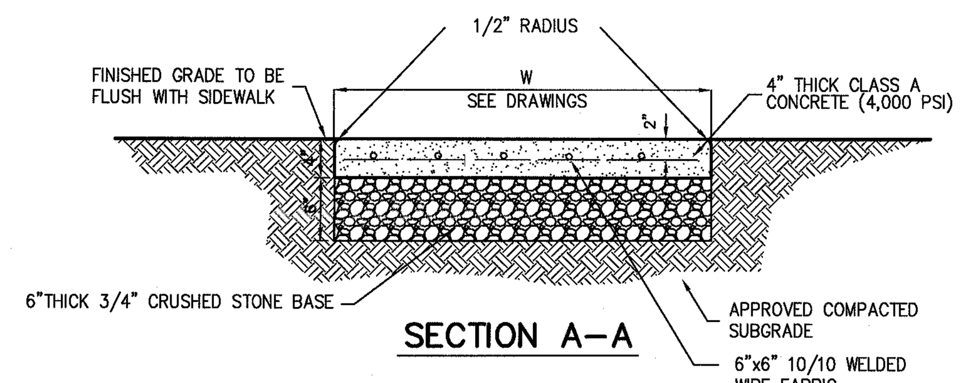

NOTES:

1. SIDEWALK CROSS SLOPE SHALL BE 1% MIN. TO 2% MAX.
2. PROVIDE 1/2" PREMOLDED EXPANSION JOINTS AT 20' INTERVALS UNLESS OTHERWISE DIRECTED.
3. REINFORCING SHALL NOT EXTEND THROUGH EXPANSION JOINTS.
4. SIDEWALK SHALL HAVE LIGHT BROOM FINISH

CONCRETE SIDEWALK 30

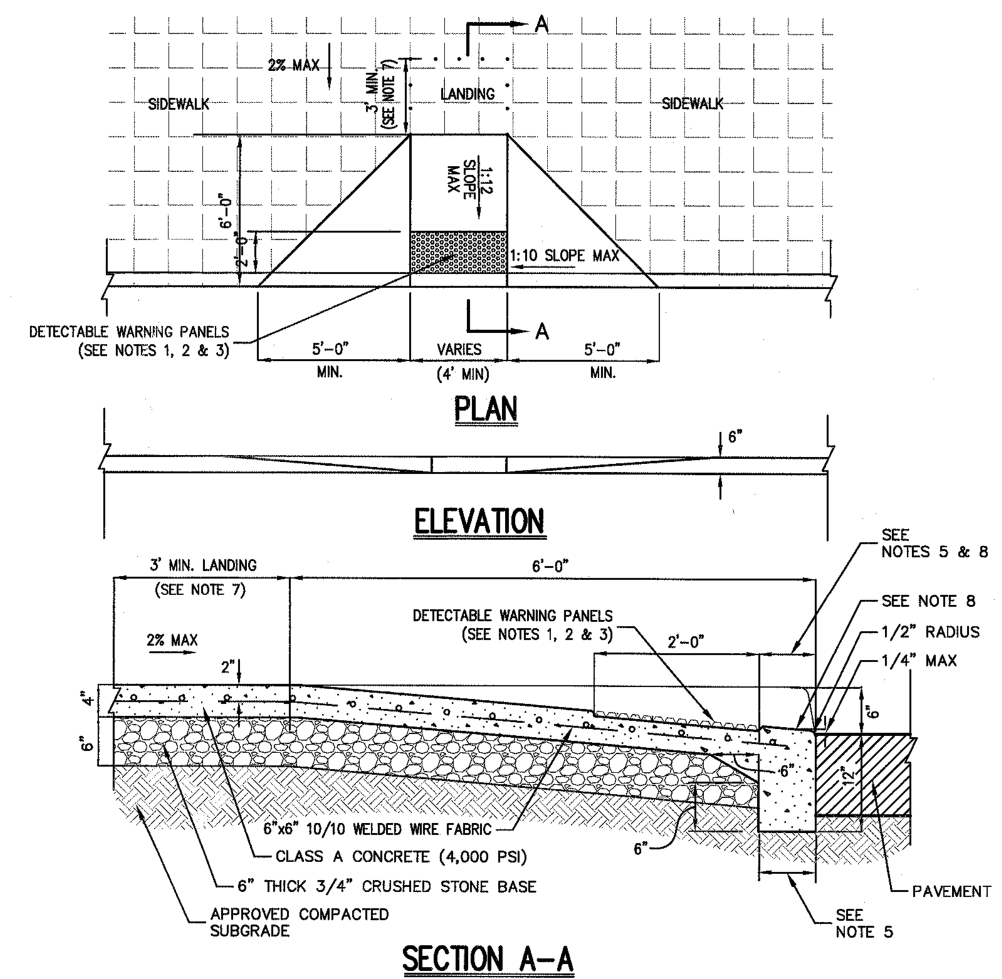

NOTES:

1. RAMPS SHALL HAVE CAST IN PLACE DETECTABLE/TACTILE WARNING SURFACE TILES AS MANUFACTURED BY ARMOR-TILE (OR APPROVED EQUAL) AND SHALL CONSIST OF RAISED TRUNCATED DOMES WITH A DIAMETER OF NOMINAL 0.9 INCHES, A HEIGHT OF NOMINAL 0.2 INCHES AND A CENTER TO CENTER SPACING OF NOMINAL 2.35 INCHES.
2. DETECTABLE WARNING PANELS SHALL CONTRAST VISUALLY WITH ADJOINING SURFACES, EITHER LIGHT-ON-DARK OR DARK-ON-LIGHT IN ACCORDANCE WITH SECTION 4.29.2, FEDERAL REGISTER, VOLUME 56, NO. 144, RULES AND REGULATIONS, APPENDIX A TO PART 36 - STANDARDS FOR ACCESSIBLE DESIGN (AMERICANS WITH DISABILITIES ACT), LATEST EDITION.
3. 24" WIDTH OF PANELS TO BE INSTALLED DIRECTLY BEHIND CURB AND IN ACCORDANCE WITH MANUFACTURER'S SPECIFICATIONS.
4. A MINIMUM OF 3 FEET CLEAR SHALL BE MAINTAINED AT ANY PERMANENT OBSTACLE IN ACCESSIBLE ROUTE (I.E., HYDRANTS, UTILITY POLES, TREE WELLS, SIGNS, ETC.).
5. CURB TREATMENT VARIES, SEE PLANS FOR CURB TYPE AND SEE CURB DETAIL FOR DIMENSIONS.
6. RAMP, CURB AND ADJACENT PAVEMENTS SHALL BE GRADED TO PREVENT PONDING.
7. WHEN LANDING OF RAMP ADJOINS A DOORWAY THEN THE MINIMUM DOORWAY MANEUVERING AREA SHALL BE AT LEAST THE WIDTH OF THE DOORWAY AND SHALL HAVE A MINIMUM DEPTH OF:
   MANUAL SWING DOORS = 60" MIN.
   FULL POWERED AUTOMATIC SLIDING DOORS = 48" MIN.
8. CONTRACTOR TO ENSURE TOP OF CURB MATCHES SLOPE OF RAMP.

DROP CURB & RAMP (TYPE A) 31

WITH DETECTABLE WARNING

No.	Revision	Date	By
	Previous Editions Obsolete		

APPLICANT/OWNER:
RAMLAND HOLDINGS, LLC
96 FRENEAU AVENUE
MATAWAN, NEW JERSEY 07747

ARCHITECT:
MICHELLE DROLETTE ARCHITECT, LLC
129 EAST HIGH STREET
HELLERTOWN, PA 18055

JMC
JMC Planning, Engineering, Landscape Architecture & Land Surveying, PLLC
JMC Site Development Consultants, LLC
John Meyer Consulting, Inc.
120 BEDFORD ROAD • ARMONK, NY 10504
voice 914.273.5225 • fax 914.273.2102
www.jmcpllc.com

CONSTRUCTION DETAILS

DATA CENTER BUILDING EXPANSION
1 RAMLAND ROAD
TOWN OF ORANGETOWN, NEW YORK

ANY ALTERATION OF PLANS, SPECIFICATIONS, PLATS AND REPORTS BEARING THE SEAL OF A LICENSED PROFESSIONAL ENGINEER OR LICENSED LAND SURVEYOR IS A VIOLATION OF ARTICLE 145 OF THE NEW YORK STATE EDUCATION LAW, EXCEPT AS PROVIDED FOR BY SECTION 7209, SUBSECTION 2.

Drawn:	BD	Approved:	RR
Scale:	NOT TO SCALE		
Date:	10/18/2022		
Project No:	13016		
13016-DETAILS-NEW	SHEET4		-
Drawing No:	C-903		

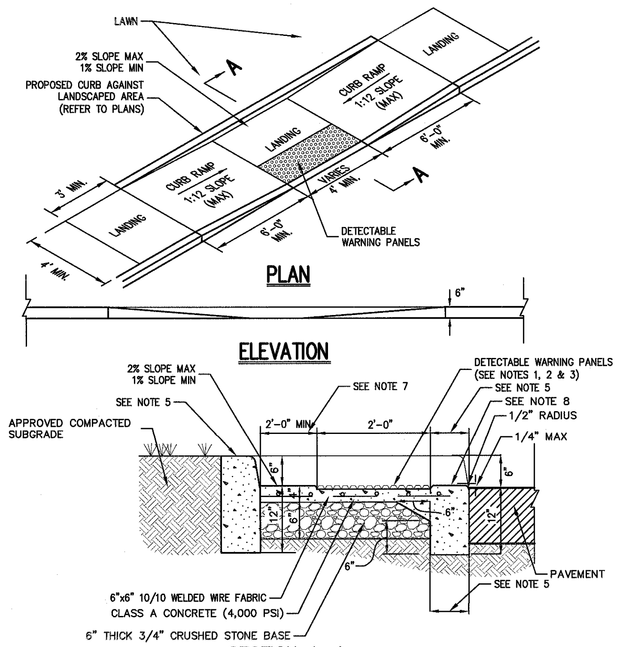

SECTION A–A

NOTES:

1. RAMPS SHALL HAVE CAST IN PLACE DETECTABLE/TACTILE WARNING SURFACE TILES AS MANUFACTURED BY ARMOR–TILE (OR APPROVED EQUAL) AND SHALL CONSIST OF RAISED TRUNCATED DOMES WITH A DIAMETER OF NOMINAL 0.9 INCHES, A HEIGHT OF NOMINAL 0.2 INCHES AND A CENTER TO CENTER SPACING OF NOMINAL 2.35 INCHES.
2. DETECTABLE WARNING PANELS SHALL CONTRAST VISUALLY WITH ADJOINING SURFACES, EITHER LIGHT–ON–DARK OR DARK–ON–LIGHT IN ACCORDANCE WITH SECTION 4.29.2, FEDERAL REGISTER, VOLUME 56, NO. 144, RULES AND REGULATIONS, APPENDIX A TO PART 36 – STANDARDS FOR ACCESSIBLE DESIGN (AMERICANS WITH DISABILITIES ACT), LATEST EDITION.
3. 24" WIDTH OF PANELS TO BE INSTALLED DIRECTLY BEHIND CURB AND IN ACCORDANCE WITH MANUFACTURER'S SPECIFICATIONS.
4. A MINIMUM OF 3 FEET CLEAR SHALL BE MAINTAINED AT ANY PERMANENT OBSTACLE IN ACCESSIBLE ROUTE (I.E., HYDRANTS, UTILITY POLES, TREE WELLS, SIGNS, ETC.).
5. CURB TREATMENT VARIES, SEE PLANS FOR CURB TYPE AND SEE CURB DETAIL FOR DIMENSIONS.
6. RAMP, CURB AND ADJACENT PAVEMENTS SHALL BE GRADED TO PREVENT PONDING.
7. WHEN LANDING OF RAMP ADJOINS A DOORWAY THEN THE MINIMUM DOORWAY MANEUVERING AREA SHALL BE AT LEAST THE WIDTH OF THE DOORWAY AND SHALL HAVE A MINIMUM DEPTH OF:
   MANUAL SWING DOORS = 60" MIN.
   FULL POWERED AUTOMATIC SLIDING DOORS = 48" MIN.
8. CONTRACTOR TO ENSURE TOP OF CURB MATCHES SLOPE OF RAMP.

DROP CURB & RAMP (TYPE B)

WITH DETECTABLE WARNING

32

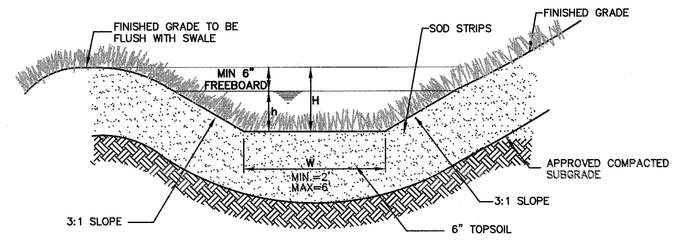

NOTES:

1. IMMEDIATELY AFTER GRADING OPERATIONS, THE GRASS SWALE SHALL BE STABILIZED WITH SOD CONTAINING A MIXTURE OF KENTUCKY BLUEGRASS, CREEPING RED FESCUE AND PERNNIAL RYEGRASS AT A RATE OF 25, 20 AND 10 POUNDS PER ACRE, RESPECTIVELY. WIDTH STRIPS OF LIVE GRASS. SOD SHALL BE CUT IN UNIFORM.
2. AREA ADJACENT TO SWALE TO BE BROUGHT TO FINISHED GRADE IMMEDIATELY AS REQUIRED, TOPSOILED, SEEDED AND MAINTAINED FOR EROSION CONTROL.

SWALE	WATER QUANITY STORM Q WQ (cfs)	DISCHARGE 10DY EVENT Q 10 (cfs)	AVERAGE SLOPE S (%)	BOTTOM WIDTH W (ft)	REQUIRED DEPTH h (ft)	PROVIDED DEPTH H (ft)	REQUIRED LENGTH l (ft)	PROVIDED LENGTH L (ft)
1	0.97	3.56	0.9	5.00	1.26	1.30	42	480

VEGETATED SWALE

33

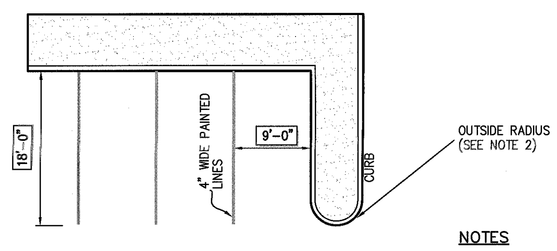

NOTES

1. COLOR OF PAINT SHALL BE XXXXXX
2. OUTSIDE RADIUS MAY VARY DEPENDING ON SHAPE OF ISLAND. RADIUS SHALL BE AS SHOWN ON LAYOUT PLAN.

90° PARKING

(SINGLE STRIPING–CURBED END)

34

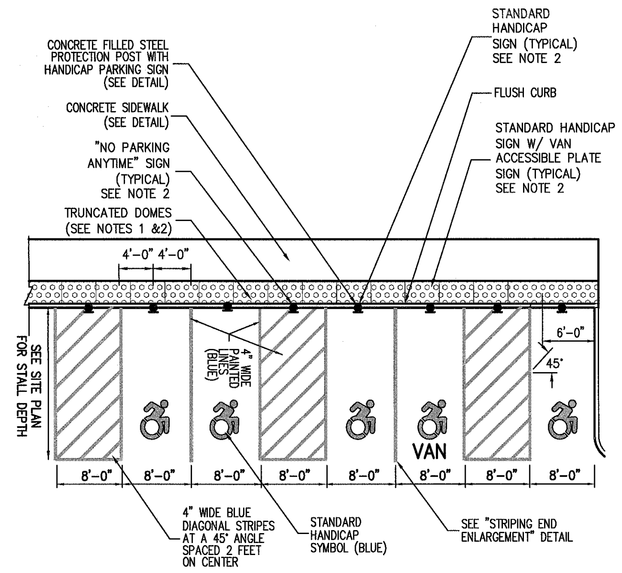

NOTES:

1. RAMPS AND SIDE RAMPS SHALL HAVE DETECTABLE WARNINGS CONSISTING OF RAISED TRUNCATED DOMES WITH A DIAMETER OF NOMINAL 0.9 INCHES, A HEIGHT OF NOMINAL 0.2 INCHES AND A CENTER TO CENTER SPACING OF NOMINAL 2.35 INCHES.
2. THEY SHALL CONTRAST VISUALLY WITH ADJOINING SURFACES, EITHER LIGHT–ON–DARK OR DARK–ON–LIGHT IN ACCORDANCE WITH SECTION 4.29.2, FEDERAL REGISTER, VOLUME 56, NO. 144, RULES AND REGULATIONS, APPENDIX A TO PART 36 – STANDARDS FOR ACCESSIBLE DESIGN (AMERICANS WITH DISABILITIES ACT), DATED JULY 26, 1991 AND SUBSEQUENT REVISIONS.
3. SLOPES IN HANDICAP PARKING AREAS SHALL NOT EXCEED 1.5%.
4. SEE SITE PLANS/SIGN TABLE FOR SIGN DESIGNATIONS, LOCATIONS AND SPECIFICATIONS.

HANDICAP PARKING

SINGLE STRIPING – CURBLINE ALIGNMENT – W/SIDEWALK)
(NEW YORK)

35

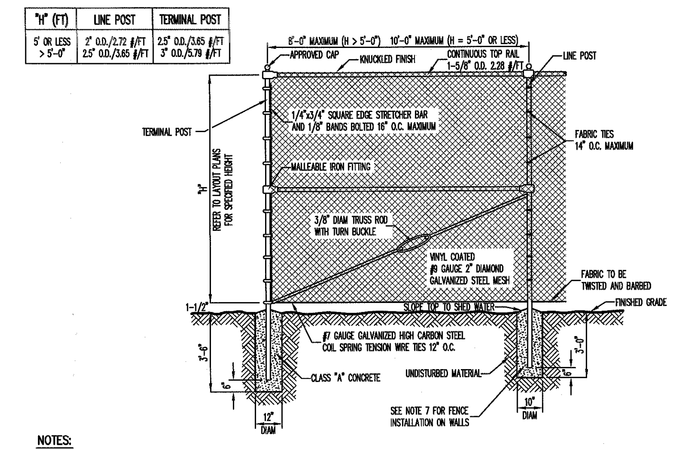

NOTES:

1. ALL POSTS, RAILS, FABRIC AND ACCESSORIES SHALL BE VINYL COATED. COLOR OF VINYL COATING SHALL BE BLACK.
2. POST AND RAILS SHALL BE STANDARD FULL WEIGHT VINYL COATED GALVANIZED SCHEDULE 40 PIPE MANUFACTURED AND GALVANIZED IN ACCORDANCE WITH ASTM A–120. ALL MATERIALS SHALL BE NEW AND FIRST CLASS AND SHALL NOT INCLUDE RECONDITIONED OR REROLLED PIPE.
3. FITTINGS SHALL BE VINYL COATED MALLEABLE IRON FITTINGS CONFORMING TO THE REQUIREMENTS OF ASTM A–47 GALVANIZED IN ACCORDANCE WITH ASTM A–153.
4. FABRIC SHALL BE 9 GAUGE GALVANIZED 2" MESH, WHICH SHALL BE VINYL CLAD IN CONFORMANCE WITH THE REQUIREMENTS OF AASHTO M–181, TYPE III. VINYL COATING SHALL BE FIRMLY AND CONTINUOUSLY EXTRUSION BONDED TO THE GALVANIZED STEEL WIRE. TOP SELVAGE SHALL HAVE KNUCKLED FINISH.
5. TENSION WIRE SHALL BE VINYL COATED 7 GAUGE MEETING THE REQUIREMENTS OF ASTM A–641 AS MODIFIED HEREIN. THE TENSILE STRENGTH SHALL BE AT LEAST 80,000 PSI WITH A GALVANIZED COATING OF NOT LESS THAN 0.7 OZ. PER SQUARE FOOT.
6. FABRIC TIES SHALL BE MINIMUM 9 GAUGE VINYL COATED GALVANIZED STEEL OR ALUMINUM. MINIMUM SPACING SHALL BE AS FOLLOWS:
   A. 14" O.C. AT LINE POSTS
   B. 24" O.C. AT TOP RAIL
   C. 12" O.C. AT TENSION WIRE
7. WHERE CHAIN LINK FENCE IS TO BE INSTALLED ON WALLS, THE FENCE POSTS SHALL BE IMBEDDED A MINIMUM OF TWELVE (12) INCHES IN THE WALL. NEWLY CONSTRUCTED WALLS SHALL BE PROVIDED WITH PROPER SIZE SLEEVES TO ACCOMMODATE FENCE POSTS. FENCE POSTS SHALL BE SECURELY GROUTED IN PLACE USING AN APPROVED HIGH STRENGTH, NON–SHRINKING, NON–STAINING GROUT.
8. THE CONTRACTOR WILL BE REQUIRED TO SUBMIT SHOP AND ERECTION DRAWINGS INDICATING MATERIALS, SIZES AND DIMENSIONS OF FENCING TO THE OWNER'S FIELD REPRESENTATIVE PRIOR TO ORDERING MATERIALS FOR HIS REVIEW AND APPROVAL.
9. PRIOR TO INSTALLATION OF THE FENCE, THE CONTRACTOR SHALL CHECK THE FENCE LAYOUT WITH THE OWNER'S FIELD REPRESENTATIVE WHO MUST APPROVE THE LAYOUT BEFORE ANY OF THE WORK IS TO BE DONE.

CHAIN LINK FENCE

(VINYL COATED)

36

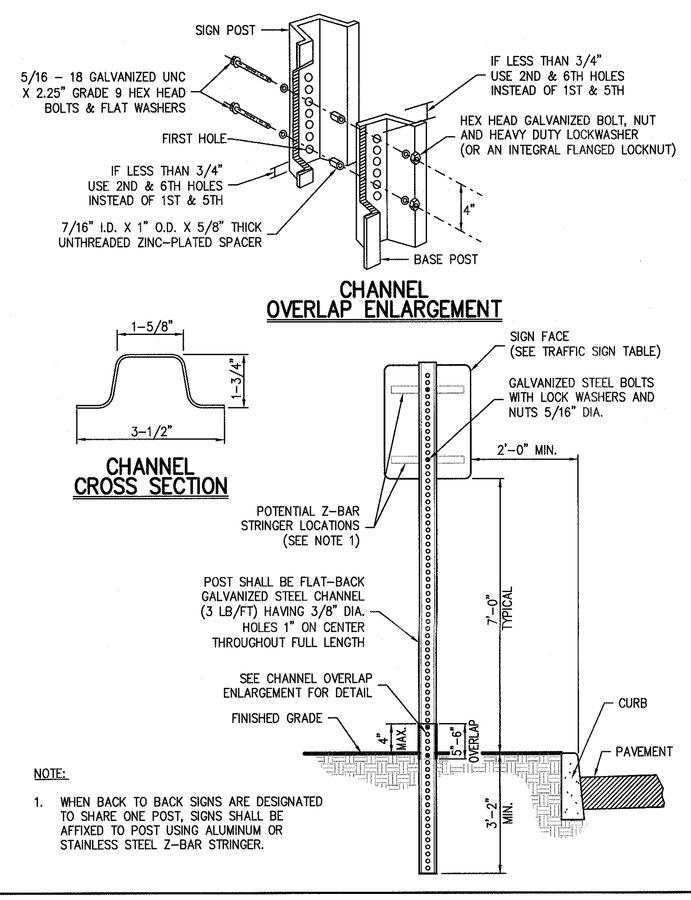

NOTE:

1. WHEN BACK TO BACK SIGNS ARE DESIGNATED TO SHARE ONE POST, SIGNS SHALL BE AFFIXED TO POST USING ALUMINUM OR STAINLESS STEEL Z–BAR STRINGER.

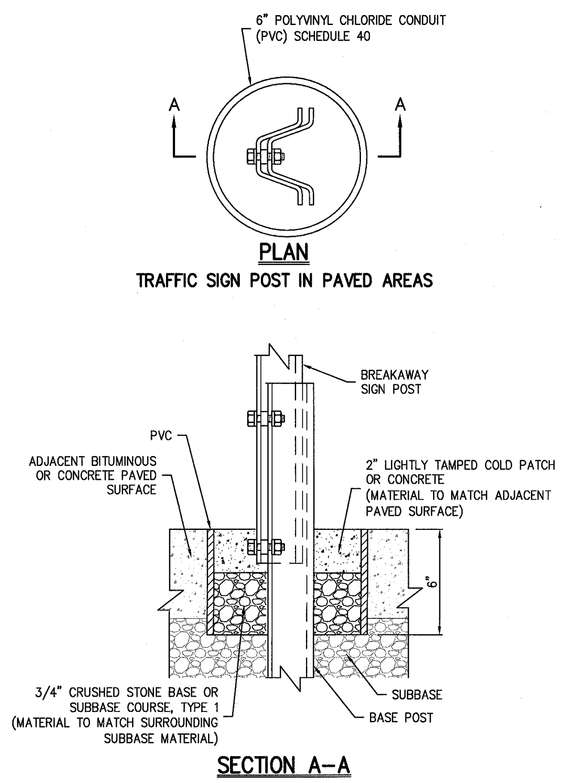

TRAFFIC SIGN POST

(BREAKAWAY STEEL CHANNEL)

37

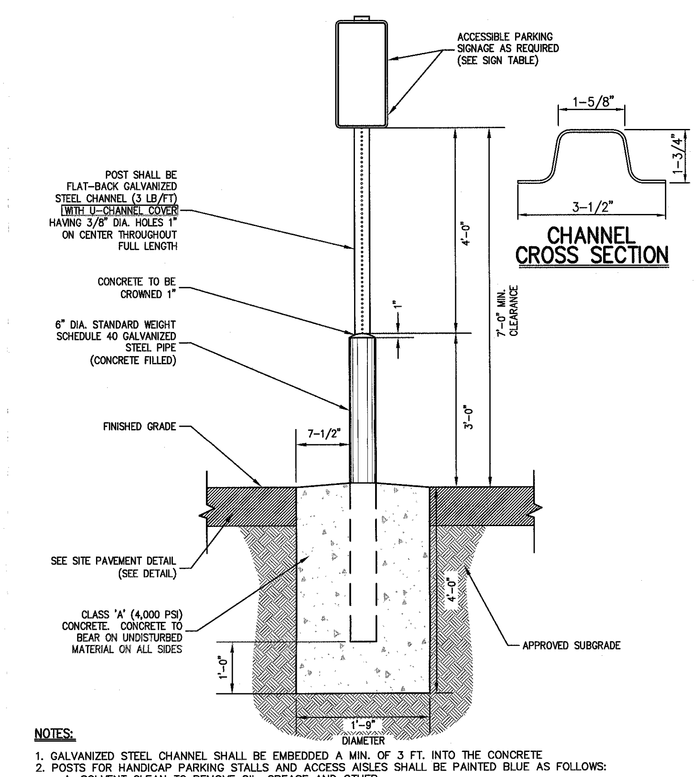

NOTES:

1. GALVANIZED STEEL CHANNEL SHALL BE EMBEDDED A MIN. OF 3 FT. INTO THE CONCRETE
2. POSTS FOR HANDICAP PARKING STALLS AND ACCESS AISLES SHALL BE PAINTED BLUE AS FOLLOWS:
   A. SOLVENT CLEAN TO REMOVE OIL, GREASE AND OTHER CONTAMINANTS.
   B. APPLY METAL PRIMER FOR GALVANIZED SURFACES.
   C. APPLY TWO (2) FINISH COATS OF APPROVED EXTERIOR PAINT FOR METAL SURFACES.
3. CONTRACTOR SHALL BE RESPONSIBLE FOR COORDINATING THE INSTALLATION OF THE PARKING SIGNS, BOLLARDS AND FOUNDATIONS WITH THE DESIGN AND INSTALLATION OF THE SITE SIDEWALKS, CURBING, PAVEMENT AND ANY OTHER SITE FEATURES SHOWN ON THE PLANS.
4. FASTEN SIGN TO POSTS WITH GALVANIZED STEEL BOLTS, LOCK WASHERS, AND NUTS (5/16" DIA.)
5. U–CHANNEL COVERS FOR POSTS SHALL BE BLUE WITH WHITE STRIPE FOR HANDICAP PARKING STALLS AND HANDICAP ACCESS AISLES.

ACCESSIBLE PARKING SIGN DETAIL

38

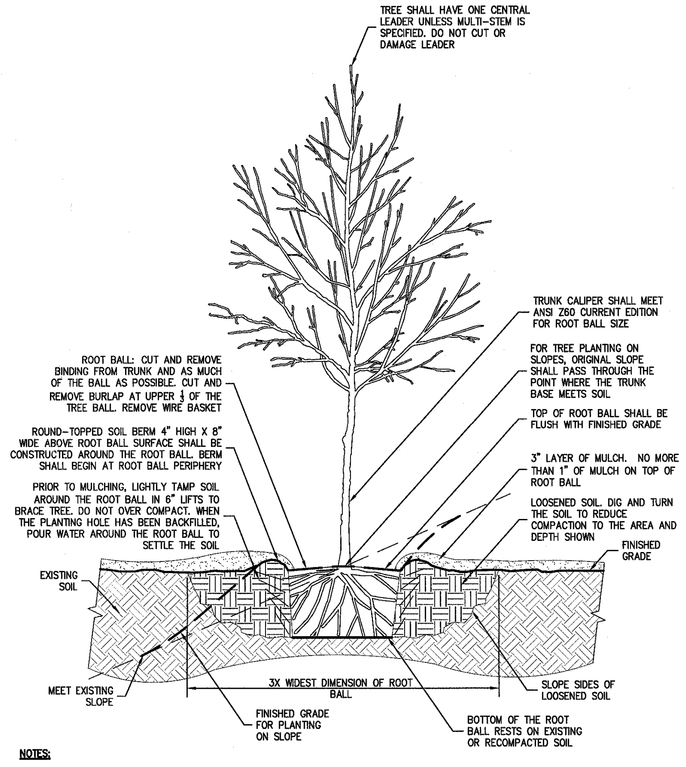

NOTES:

1. ALL PLANTING BEDS SHALL BE FREE OF WEEDS AND GRASS PRIOR TO AND FOLLOWING INSTALLATION OF PLANTS.
2. PLANTS IN CONTAINERS MUST HAVE THE FIBROUS ROOTS PULLED APART.
3. PROPOSED PLANT MATERIAL SHALL BEAR THE SAME RELATION TO FINISHED GRADE AS IT BORE TO PREVIOUS EXISTING GRADE.
4. SEE TREE STAKING DETAIL IF STAKING IS REQUIRED.

TREE PLANTING

(DECIDUOUS AND EVERGREEN)

39

No.	Revision	Date	By

Previous Editions Obsolete

APPLICANT/OWNER:
RAMLAND HOLDINGS, LLC
96 FRENEAU AVENUE
MATAWAN, NEW JERSEY 07747

ARCHITECT:
MICHELLE DROLETTE ARCHITECT, LLC
129 EAST HIGH STREET
HELLERTOWN, PA 18055

JMC Planning, Engineering, Landscape Architecture & Land Surveying, PLLC
JMC Site Development Consultants, LLC
John Meyer Consulting, Inc.
120 BEDFORD ROAD • ARMONK, NY 10504
voice 914.273.5225 • fax 914.273.2102
www.jmcpllc.com

CONSTRUCTION DETAILS

DATA CENTER BUILDING EXPANSION
1 RAMLAND ROAD
TOWN OF ORANGETOWN, NEW YORK

ANY ALTERATION OF PLANS, SPECIFICATIONS, PLATS AND REPORTS BEARING THE SEAL OF A LICENSED PROFESSIONAL ENGINEER OR LICENSED LAND SURVEYOR IS A VIOLATION OF ARTICLE 145 OF THE NEW YORK STATE EDUCATION LAW, EXCEPT AS PROVIDED FOR BY SECTION 7209, SUBSECTION 2.

Drawn:	BD	Approved:	RR
Scale:	NOT TO SCALE		
Date:	10/18/2022		
Project No:	13016		
13016–DETAILS–NEW	SHEETS	–	
Drawing No:	C–904		

NOT FOR CONSTRUCTION
COPYRIGHT © 2011 by JMC, All Rights Reserved. No part of this document may be reproduced, stored in a retrieval system, or transmitted in any form or by means, electronic, mechanical, photocopying, recording or otherwise, without the prior written permission of JMC PLANNING, ENGINEERING, LANDSCAPE ARCHITECTURE & LAND SURVEYING, PLLC | JMC SITE DEVELOPMENT CONSULTANTS, LLC | JOHN MEYER CONSULTING, INC. (JMC). USE OF THIS DOCUMENT WITHOUT INCORPORATION OF THE SEAL OF A PROFESSIONAL ENGINEER OR LICENSED LAND SURVEYOR IS PROHIBITED.

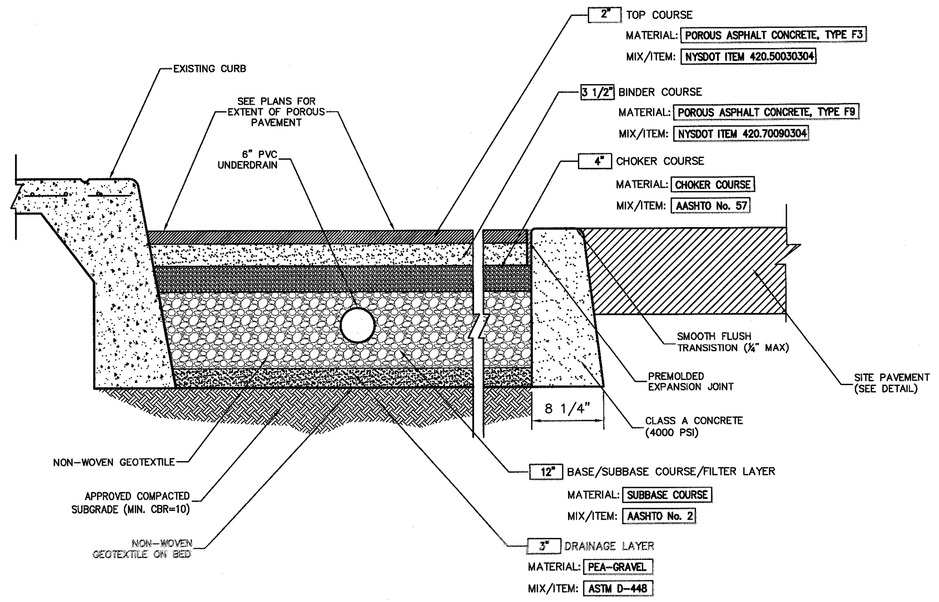

POROUS PAVEMENT

NOTES:

1. THICKNESSES INDICATED REFER TO COMPACTED MEASURE.
2. MATERIAL AND MIX/ITEM NUMBERS REFER TO NEW YORK STATE DEPARMENT OF TRANSPORTANTION SPECIFICATIONS, THE AMERICAN ASSOCIATION OF STATE HIGHWAY AND TRANSPORTATION OFFICIALS (AASHTO, AND AMERICAN SOCIETY FOR TESTING AND MATERIALS (ASTM)

POROUS PAVEMENT	40		X		X		X
		X		X		X	

NOT FOR CONSTRUCTION

COPYRIGHT © 2015 by JMC All Rights Reserved. No part of this document may be copied, stored in a retrieval system, or transmitted in any form or by means, electronic, mechanical, photocopying, recording or otherwise, without the prior written permission of ARCHITECTURE, ENGINEERING, LANDSCAPE ARCHITECTURE & LAND SURVEYING PLLC | JMC SITE DEVELOPMENT CONSULTANTS, LLC | JOHN MEYER CONSULTING, INC. Any alterations or additions to this document without the written permission of the Professional Engineer, Architect, Landscape Architect or Land Surveyor shall be in violation of the law.

No.	Revision	Date	By

Previous Editions Obsolete

APPLICANT/OWNER:
RAMLAND HOLDINGS, LLC
96 FRENEAU AVENUE
MATAWAN, NEW JERSEY 07747

ARCHITECT:
MICHELLE DROLETTE ARCHITECT, LLC
129 EAST HIGH STREET
HELLERTOWN, PA 18055

JMC Planning, Engineering, Landscape Architecture & Land Surveying, PLLC
JMC Site Development Consultants, LLC
John Meyer Consulting, Inc.
120 BEDFORD ROAD • ARMONK, NY 10504
voice 914.273.5225 • fax 914.273.2102
www.jmcpllc.com

CONSTRUCTION DETAILS

DATA CENTER BUILDING EXPANSION
1 RAMLAND ROAD
TOWN OF ORANGETOWN, NEW YORK

ANY ALTERATION OF PLANS, SPECIFICATIONS, PLATS AND REPORTS BEARING THE SEAL OF A LICENSED PROFESSIONAL ENGINEER OR LICENSED LAND SURVEYOR IS A VIOLATION OF ARTICLE 145 OF THE NEW YORK STATE EDUCATION LAW, EXCEPT AS PROVIDED FOR BY SECTION 7209, SUBSECTION 2.

Drawn: BD	Approved: RR
Scale: NOT TO SCALE	
Date: 10/18/2022	
Project No: 13016	
13016-DCIMS-NEW	SHEET6 -
Drawing No: C-905	