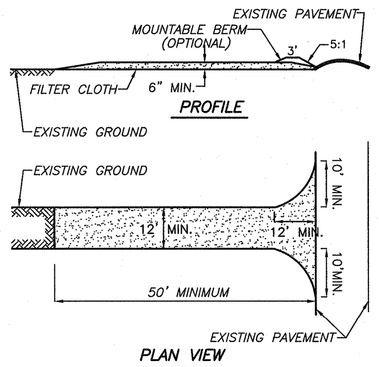

CONSTRUCTION SPECIFICATIONS

1. STONE SIZE – USE 2" STONE, OR RECLAIMED OR RECYCLED CONCRETE EQUIVALENT.
2. LENGTH – NOT LESS THAN 50 FEET (EXCEPT ON A SINGLE RESIDENCE LOT WHERE A 30 FOOT MINIMUM LENGTH WOULD APPLY.)
3. THICKNESS – NOT LESS THAN (6) INCHES.
4. WIDTH – TWELVE (12) FOOT MINIMUM. BUT NOT LESS THAN THE FULL WIDTH AT POINTS WHERE INGRESS OR EGRESS OCCURS. TWENTY-FOUR (24) FOOT IF SINGLE ENTRANCE TO SITE.
5. FILTER CLOTH – WILL BE PLACED OVER THE ENTIRE AREA PRIOR TO PLACING OF STONE.
6. SURFACE WATER – ALL SURFACE WATER FLOWING OR DIVERTED TOWARD CONSTRUCTION ENTRANCES SHALL BE PIPED ACROSS THE ENTRANCE. IF PIPING IS IMPRACTICAL, A MOUNTING BERM WITH 5:1 SLOPES WILL BE PERMITTED.
7. MAINTENANCE – THE ENTRANCE SHALL BE MAINTAINED IN A CONDITION WHICH WILL PREVENT TRACKING OR FLOWING OF SEDIMENT ONTO PUBLIC RIGHTS–OF–WAY. ALL SEDIMENT SPILLED, DROPPED, WASHED OR TRACKED ONTO PUBLIC RIGHTS–OF–WAY MUST BE REMOVED IMMEDIATELY.
8. WHEN WASHING IS REQUIRED, IT SHALL BE DONE ON AN AREA STABILIZED WITH STONE AND WHICH DRAINS INTO AN APPROVED SEDIMENT TRAPPING DEVICE.
9. PERIODIC INSPECTION AND NEEDED MAINTENANCE SHALL BE PROVIDED AFTER EACH RAIN.

STABILIZED CONSTRUCTION ENTRANCE

NTS

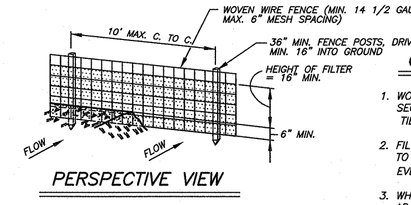

CONSTRUCTION NOTES FOR FABRICATED SILT FENCE

1. WOVEN WIRE FENCE TO BE FASTENED SECURELY TO FENCE POSTS WITH WIRE TIES OR STAPLES.
2. FILTER CLOTH TO BE FASTENED SECURELY TO WOVEN WIRE FENCE WITH TIES SPACED EVERY 24" AT TOP AND MID SECTION.
3. WHEN TWO SECTIONS OF FILTER CLOTH ADJOIN EACH OTHER THEY SHALL BE OVERLAPPED BY SIX INCHES AND FOLDED.
4. MAINTENANCE SHALL BE PERFORMED AS NEEDED AND MATERIAL REMOVED WHEN "BULGES" DEVELOP IN THE SILT FENCE.

POSTS: STEEL EITHER "T" OR "U" TYPE OR 2" HARDWOOD.
FENCE: WOVEN WIRE 14 1/2 GA. 6" MAX. MESH OPENING.
FILTER CLOTH: FILTER X, MIRAFI 100X, STABLINKA T140N, OR APPROVED EQUAL.
PREFABRICATED UNIT: GEOFAB, ENVIROFENCE, OR APPROVED EQUAL.

WIRE REINFORCED SILT FENCE

NTS

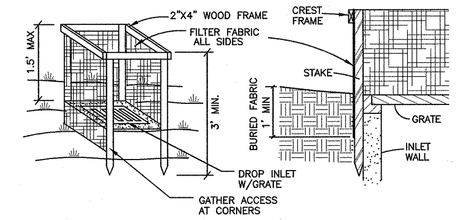

DROP INLET PROTECTION

NTS

CONSTRUCTION SPECIFICATIONS

1. FILTER FABRIC SHALL HAVE AN EOS OF 40–85. BURLAP MAY BE USED FOR SHORT TERM APPLICATIONS.
2. CUT FABRIC FROM A CONTINUOUS ROLL TO ELIMINATE JOINTS. IF JOINTS ARE NEEDED THEY WILL BE OVERLAPPED TO THE NEXT STAKE.
3. STAKE MATERIALS WILL BE STANDARD 2"X4" WOOD OR EQUIVALENT METAL WITH A MINIMUM LENGTH OF 3 FEET.
4. SPACE STAKES EVENLY AROUND INLET 3 FEET APART AND DRIVE A MINIMUM 18 INCHES DEEP. SPANS GREATER THAN 3 FEET MAY BE BRIDGED WITH THE USE OF WIRE MESH BEHIND THE FILTER FABRIC FOR SUPPORT.
5. FABRIC SHALL BE EMBEDDED 1 FOOT MINIMUM BELOW THE GROUND AND BACKFILLED. IT SHALL BE SECURELY FASTENED TO THE STAKES AND FRAME.
6. A 2"X4" WOOD FRAME SHALL BE COMPLETED AROUND THE CREST OF THE FABRIC FOR OVER FLOW STABILITY.

MAXIMUM DRAINAGE AREA: 1 ACRE

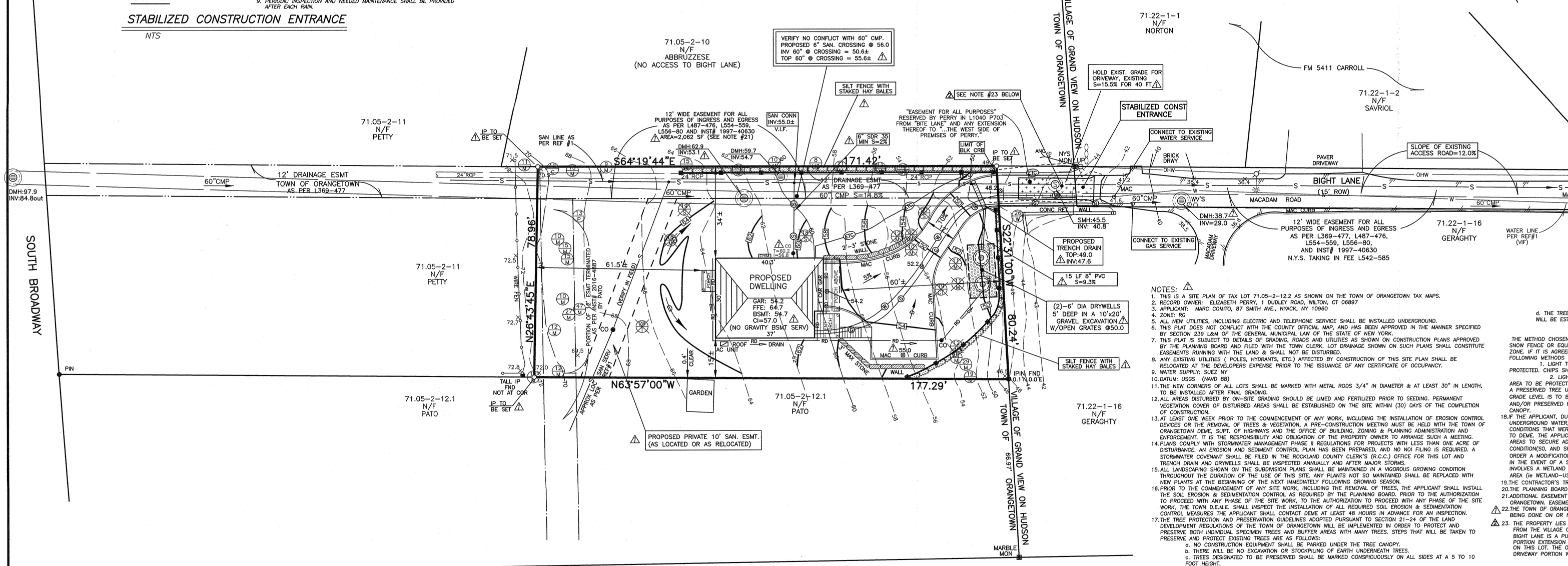

NOTES:

1. THIS IS A SITE PLAN OF TAX LOT 71.05–2–12.2 AS SHOWN ON THE TOWN OF ORANGETOWN TAX MAPS.
2. RECORD OWNER: ELIZABETH PERRY, 1 DUDLEY ROAD, WILTON, CT 06897
3. APPLICANT: MARC COMITO, 87 SMITH AVE., NYACK, NY 10960
4. ZONE: RG
5. ALL NEW UTILITIES, INCLUDING ELECTRIC AND TELEPHONE SERVICE SHALL BE INSTALLED UNDERGROUND.
6. THIS PLAT DOES NOT CONFLICT WITH THE COUNTY OFFICIAL MAP, AND HAS BEEN APPROVED IN THE MANNER SPECIFIED BY SECTION 239 L&M OF THE GENERAL MUNICIPAL LAW OF THE STATE OF NEW YORK.
7. THIS PLAT IS SUBJECT TO DETAILS OF GRADING, ROADS AND UTILITIES AS SHOWN ON CONSTRUCTION PLANS APPROVED BY THE PLANNING BOARD AND FILED WITH THE TOWN CLERK. LOT DRAINAGE SHOWN ON SUCH PLANS SHALL CONSTITUTE EASEMENTS RUNNING WITH THE LAND & SHALL NOT BE DISTURBED.
8. ANY EXISTING UTILITIES (POLES, HYDRANTS, ETC.) AFFECTED BY CONSTRUCTION OF THIS SITE PLAN SHALL BE RELOCATED AT THE DEVELOPERS EXPENSE PRIOR TO THE ISSUANCE OF ANY CERTIFICATE OF OCCUPANCY.
9. WATER SUPPLY: SUEZ NY
10. DATUM: USGS (NAVD 88)
11. THE NEW CORNERS OF ALL LOTS SHALL BE MARKED WITH METAL RODS 3/4" IN DIAMETER & AT LEAST 30" IN LENGTH, TO BE INSTALLED AFTER FINAL GRADING.
12. ALL AREAS DISTURBED BY ON–SITE GRADING SHOULD BE LIMED AND FERTILIZED PRIOR TO SEEDING. PERMANENT VEGETATION COVER OF DISTURBED AREAS SHALL BE ESTABLISHED ON THE SITE WITHIN (30) DAYS OF THE COMPLETION OF CONSTRUCTION.
13. AT LEAST ONE WEEK PRIOR TO THE COMMENCEMENT OF ANY WORK, INCLUDING THE INSTALLATION OF EROSION CONTROL DEVICES OR THE REMOVAL OF TREES & VEGETATION, A PRE–CONSTRUCTION MEETING MUST BE HELD WITH THE TOWN OF ORANGETOWN DEME, SUPT. OF HIGHWAYS AND THE OFFICE OF BUILDING, ZONING & PLANNING ADMINISTRATION AND ENFORCEMENT. IT IS THE RESPONSIBILITY AND OBLIGATION OF THE PROPERTY OWNER TO ARRANGE SUCH A MEETING.
14. PLANS COMPLY WITH STORMWATER MANAGEMENT PHASE II REGULATIONS FOR PROJECTS WITH LESS THAN ONE ACRE OF DISTURBANCE. AN EROSION AND SEDIMENT CONTROL PLAN HAS BEEN PREPARED, AND NO NOI FILING IS REQUIRED. A STORMWATER COVENANT SHALL BE FILED IN THE ROCKLAND COUNTY CLERK'S (R.C.C.) OFFICE FOR THIS LOT AND TRENCH DRAIN AND DRYWELLS SHALL BE INSPECTED ANNUALLY AND AFTER MAJOR STORMS.
15. ALL LANDSCAPING SHOWN ON THE SUBDIVISION PLANS SHALL BE MAINTAINED IN A VIGOROUS GROWING CONDITION THROUGHOUT THE DURATION OF THE USE OF THIS SITE. ANY PLANTS NOT SO MAINTAINED SHALL BE REPLACED WITH NEW PLANTS AT THE BEGINNING OF THE NEXT IMMEDIATELY FOLLOWING GROWING SEASON.
16. PRIOR TO THE COMMENCEMENT OF ANY SITE WORK, INCLUDING THE REMOVAL OF TREES, THE APPLICANT SHALL INSTALL THE SOIL EROSION & SEDIMENTATION CONTROL AS REQUIRED BY THE PLANNING BOARD. PRIOR TO THE AUTHORIZATION TO PROCEED WITH ANY PHASE OF THE SITE WORK, TO THE AUTHORIZATION TO PROCEED WITH ANY PHASE OF THE SITE WORK, THE TOWN D.E.M.E. SHALL INSPECT THE INSTALLATION OF ALL REQUIRED SOIL EROSION & SEDIMENTATION CONTROL MEASURES THE APPLICANT SHALL CONTACT DEME AT LEAST 48 HOURS IN ADVANCE FOR AN INSPECTION.
17. THE TREE PROTECTION AND PRESERVATION GUIDELINES ADOPTED PURSUANT TO SECTION 21–24 OF THE LAND DEVELOPMENT REGULATIONS OF THE TOWN OF ORANGETOWN WILL BE IMPLEMENTED IN ORDER TO PROTECT AND PRESERVE BOTH INDIVIDUAL SPECIMEN TREES AND BUFFER AREAS WITH MANY TREES. STEPS THAT WILL BE TAKEN TO PRESERVE AND PROTECT EXISTING TREES ARE AS FOLLOWS:
   a. NO CONSTRUCTION EQUIPMENT SHALL BE PARKED UNDER THE TREE CANOPY.
   b. THERE WILL BE NO EXCAVATION OR STOCKPILING OF EARTH UNDERNEATH TREES.
   c. TREES DESIGNATED TO BE PRESERVED SHALL BE MARKED CONSPICUOUSLY ON ALL SIDES AT A 5 TO 10 FOOT HEIGHT.
   d. THE TREE PROTECTION ZONE FOR TREES DESIGNATED TO BE PRESERVED WILL BE ESTABLISHED BY ONE OF THE FOLLOWING METHODS:
      1. ONE (1) FOOT RADIUS FROM TRUNK PER INCH DBH
      2. DRIP LINE OF THE TREE CANOPY

   THE METHOD CHOSEN SHOULD BE BASED ON PROVIDING THE MAXIMUM PROTECTION ZONE POSSIBLE. A BARRIER OF SNOW FENCE OR EQUAL IS TO BE PLACED AND MAINTAINED ONE YARD BEYOND THE ESTABLISHED TREE PROTECTION ZONE. IF IT IS AGREED THAT THE TREE PROTECTION ZONE OF A SELECTED TREE MUST BE VIOLATED, ONE OF THE FOLLOWING METHODS MUST BE EMPLOYED TO MITIGATE THE IMPACT:
      1. LIGHT TO HEAVY IMPACTS– MINIMUM OF EIGHT INCHES OF WOOD CHIPS INSTALLED IN THE AREA TO BE PROTECTED. CHIPS SHALL BE REMOVED UPON COMPLETION OF WORK.
      2. LIGHT IMPACTS ONLY– INSTALLATION OF 3/4 INCH OF PLYWOOD OR BOARDS, OR EQUAL OVER THE AREA TO BE PROTECTED. THE BUILDER OR ITS AGENT MAY NOT CHANGE GRADE WITHIN THE TREE PROTECTION ZONE OF A PRESERVED TREE UNLESS SUCH GRADE CHANGE HAS RECEIVED FINAL APPROVAL FROM THE PLANNING BOARD. IF THE GRADE LEVEL IS TO BE CHANGED MORE THAN SIX (6) INCHES TREES DESIGNATED TO BE PRESERVED SHALL BE WELLED AND/OR PRESERVED IN A RAISED BED, WITH THE TREE WELL RADIUS OF THREE (3) FEET LARGER THAN THE TREE CANOPY.
18. IF THE APPLICANT, DURING THE COURSE OF CONSTRUCTION, ENCOUNTERS SUCH CONDITIONS AS FLOOD AREAS, UNDERGROUND WATER, SOFT OR SILTY AREAS IMPROPER DRAINAGE, OR ANY OTHER UNUSUAL CIRCUMSTANCES OR CONDITIONS THAT WERE NOT FORESEEN IN THE ORIGINAL PLANNING, SUCH CONDITIONS SHALL BE REPORTED IMMEDIATELY TO DEME. THE APPLICANT SHALL SUBMIT THEIR RECOMMENDATIONS AS TO THE SPECIAL TREATMENT TO BE GIVEN SUCH AREAS TO SECURE ADEQUATE, PERMANENT AND SATISFACTORY CONSTRUCTION. DEME SHALL INVESTIGATE THE CONDITION(SO, AND SHALL EITHER APPROVE THE APPLICANT'S RECOMMENDATIONS TO CORRECT THE CONDITIONS, OR ORDER A MODIFICATION THEREOF. IN THE EVENT OF THE APPLICANT'S DISAGREEMENT WITH THE DECISION OF DEME, OR IN THE EVENT OF A SIGNIFICANT CHANGE RESULTING TO THE SUBDIVISION PLAN OR SITE PLAN OR ANY CHANGE THAT INVOLVES A WETLAND REGULATED AREA, THE MATTER SHALL BE DECIDED BY THE AGENCY WITH JURISDICTION IN THAT AREA (ie WETLAND–US ARMY CORPS OF ENGINEERS)
19. THE CONTRACTOR'S TRAILER, IF ANY IS PROPOSED, SHALL BE LOCATED AS APPROVED BY THE PLANNING BOARD.
20. THE PLANNING BOARD SHALL RETAIN JURISDICTION OVER LIGHTING, LANDSCAPING, SIGNS AND REFUSE CONTROL.
21. ADDITIONAL EASEMENT AREA TO ENCOMPASS THE 60" PIPE SHALL BE GRATUITOUSLY CONVEYED TO THE TOWN OF ORANGETOWN. EASEMENT TO BE REVIEWED AND APPROVED BY TOWN ATTORNEY.
22. THE TOWN OF ORANGETOWN SEWER INSPECTOR SHALL BE NOTIFIED AT LEAST 48 HOURS IN ADVANCE OF ANY WORK BEING DONE ON OR NEAR THE TOWN SANITARY MAIN AND OR THE PROPOSED SANITARY HOUSE CONNECTION.
23. THE PROPERTY LIES IN THE UNINCORPORATED PART OF THE TOWN OF ORANGETOWN AND DOES NOT RECEIVE SERVICES FROM THE VILLAGE OF GRAND VIEW ON HUDSON.
    BIGHT LANE IS A PUBLIC ROAD MAINTAINED BY THE VILLAGE OF GRAND VIEW ON HUDSON, BUT THE DRIVEWAY PORTION EXTENSION WILL BE REQUIRED TO BE MAINTAINED BY THE OWNER OF THE DWELLING TO BE CONSTRUCTED ON THIS LOT. THE OWNER OF TAX LOT 71.22–1–16 WILL NOT HAVE ANY RESPONSIBILITY TO MAINTAIN THE DRIVEWAY PORTION WITHIN THE EASEMENT, AT THE WESTERLY TERMINUS OF BIGHT LANE.

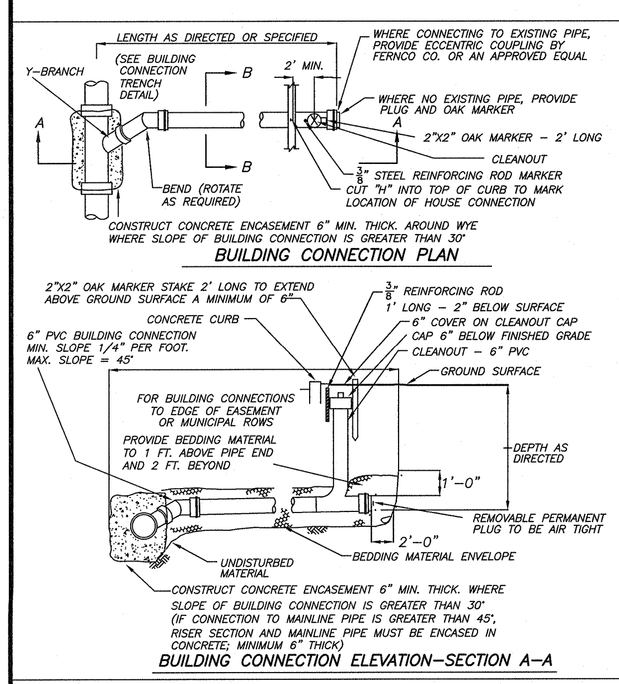

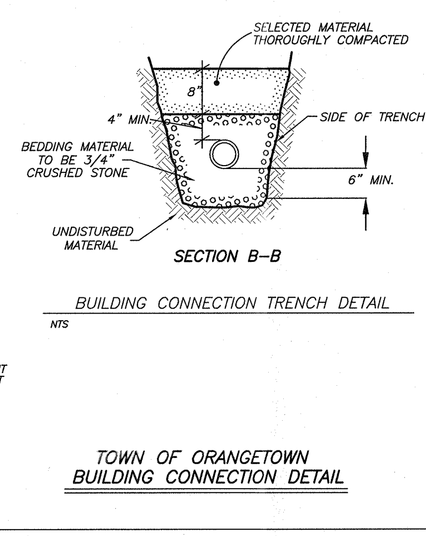

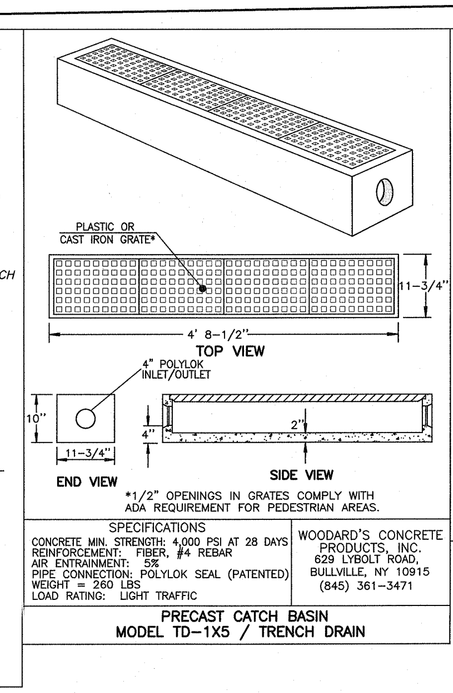

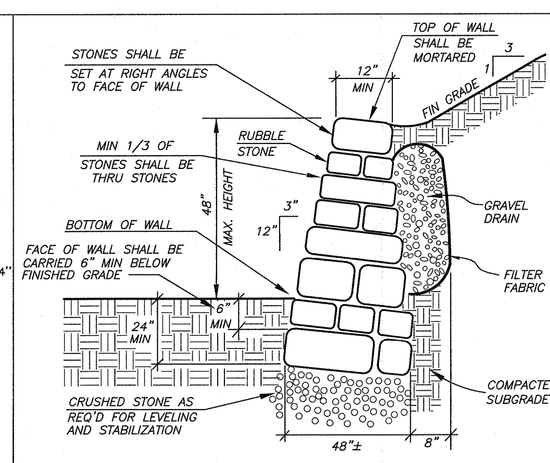

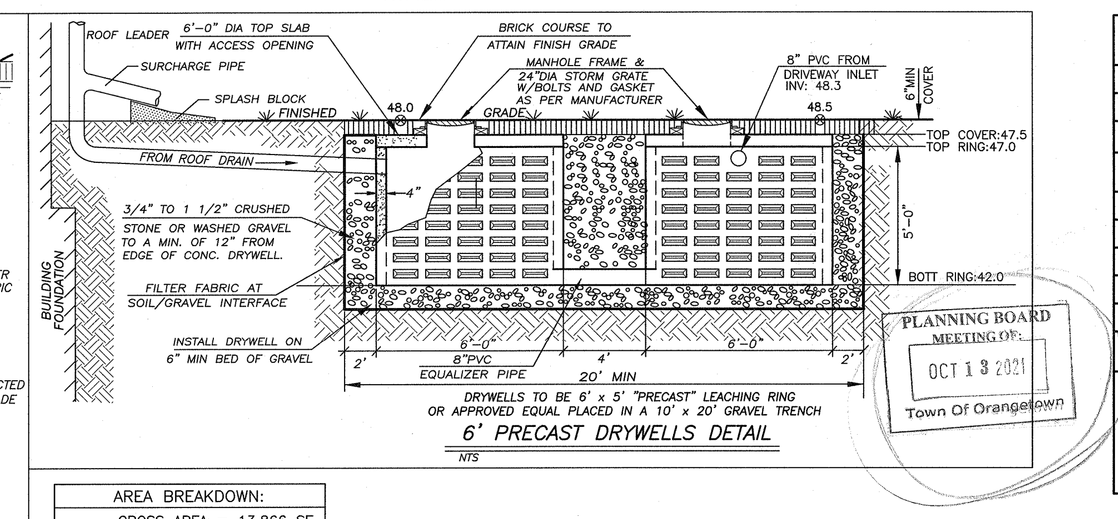

PLANNING BOARD MEETING OF: OCT 13 2021 Town Of Orangetown

BULK TABLE • ZONE R–G • USE GROUP "Q"		
ITEM	REQUIRED	PROVIDED
MAX. FAR	0.30	0.21
STREET FRONTAGE	75 FT	12'⊕✳
MIN AREA	10,000 SF	GROSS:13,866 SF NET:12,835 SF
MIN LOT WIDTH	75'	80'±
FRONT YARD	25 FT	60'±
SIDE YARD	10 FT	15' △1
TOTAL SIDE YARD	30 FT	49'±
MIN REAR YARD	25 FT	61.5' △1
BUILDING HT.	1'–4" / FT	30'±

⊕ = EXISTING NON–CONFORMING
✳ = VARIANCE REQUIRED – FRONTAGE ON PRIVATE ROAD △1 (GRANTED BY ZBA #21–72, 7/21/21)
✳ = VARIANCE REQUIRED FOR DRIVEWAY SLOPE △1 (GRANTED BY ZBA #21–72, 7/21/21)

RECEIVED SEP 18 2021 TOWN OF ORANGETOWN LAND USE BOARDS

AREA BREAKDOWN:
GROSS AREA = 13,866 SF
–50% DRAINAGE ESMT= 1,031 SF
NET AREA = 12,835 SF

IMPERVIOUS AREA TO BE MITIGATED = 3460 SF

LEGEND

DRAINAGE INLET W/PIPES
SANITARY MANHOLE W/PIPES — S — SMH — S —
TOP CURB @ CATCH BASIN — TCCB
TOP GRATE FIELD INLET — TGFI
REINFORCED CONCRETE PIPE — RCP
CORRUGATED PLASTIC PIPE — CPP
UTILITY POLE — UP
UTILITY POLE WITH LIGHT
WATER VALVE — WV
HYDRANT — HYD
GAS VALVE — GV △
OVERHEAD WIRES — OHW
GAS LINE — G
GAS, ELEC, TEL — GET
WATER LINE — W
CONTOUR LINE — 520
PROPOSED CONTOUR LINE — 522
PROPOSED SPOT GRADE — ⊕ 524.0

TREE LEGEND

12 / K2 — SIZE IN INCHES (LARGEST DIA SHOWN IN TWIN/TRIPLE)
LETTER INDICATES TREE TYPE (SEE BELOW)
SECOND NUMBER (2), (3) INDICATES TWIN/TRIPLE

C = CHERRY — P = PINE
CT = CATALBA — S = SYCAMORE
M = MAPLE — T = TULIP

REFERENCES:
1. MAP ENTITLED "SITE PLAN PERRY RESIDENCE", PREPARED BY DOMINICK R. PILA ASSOCIATES, P.C. LAST REVISED 11/26/2007.
2. MAP ENTITLED "PROPOSED GARAGE FOR PERRY", PREPARED BY ANTHONY CELENTANO P.L.S. DATED MAY 2, 2006.
3. TITLE REPORT NO. EL–100637, PREPARED BY STEWART TITLE INSURANCE COMPANY, DATED MAY 13, 2020.
4. DEEDS ON FILE IN THE ROCKLAND COUNTY CLERK'S OFFICE AS FOLLOWS: L559–P576, INST# 1997–40630, INST# 2016–4887, INST# 2016–52132, L757 P2222, L1028 P1082, INST# 2009–24760, L542 P585, L369 P477, L487 P476, L554 P559, L556 P80, INST#1997–40630

GDANSKI CONSULTANTS, INC.
25 RIVERSIDE DRIVE
SUFFERN, NEW YORK, 10901
STATE OF NEW YORK · PAUL GDANSKI · No. 075890 · LICENSED PROFESSIONAL ENGINEER
PAUL GDANSKI, PE
NYS LIC. 075890

DATE	REVISIONS
△2 9/1/21	NOTE 23
△1 4/29/21	REVISIONS

STATE OF NEW YORK · JAY A. GREENWELL · No. 049676 · LICENSED LAND SURVEYOR
JAY A. GREENWELL, PLS
NYS LIC. # 49676

PLOT PLAN FOR
455 SOUTH BROADWAY

COMITO–BIGHT LANE

TOWN OF ORANGETOWN
ROCKLAND COUNTY, STATE OF NEW YORK

JAY A. GREENWELL, PLS, LLC
SURVEYING – LAND PLANNING
85 LAFAYETTE AVENUE, SUFFERN, NEW YORK, 10901
PHONE 845–357–0830 FAX 845–357–0756

© 2021 JAY A. GREENWELL, PLS, LLC

TAX LOT #	71.05–2–12.2
AREA	13,866 SF
FILE	22023 PLOT
SCALE	1"= 20'
DATE	1/20/21
JOB NO.	22023